# ART 708-A

## ACTIVE TWO-WAY SPEAKER

## MAIN APPLICATIONS

- Compact voice and music reinforcement systems
- Front and under-balcony fill
- Small theatres and convention centers
- Portable and installed audio-visual systems
- Stage monitoring
- Houses of worship

## MAIN FEATURES

- 700 Watt digital bi-amplification
- 128 dB max spl
- Wide dispersion 90 x 70 constant directivity horn
- 8" High power neodymium woofer, 2.5" voice coil
- 1" Titanium dome, neodymium high frequency driver, 1.75" voice coil
- PFC power factor corrector
- Xlr/jack combo input, xlr signal output

## DESCRIPTION

The ART 708-A presents high fidelity sound reproduction, careful acoustic design, high quality neodymium transducers, very compact size cabinet and very linear and precise frequency response which is perfect for voice monitoring and amplification.
ART 708-A is equipped with a new generation of 700 Watt Digital Amplifier, 500 Watt for the woofer and 200 Watt for the compression driver. The result of this is very high output, extremely low distortion and an incredible natural sound. The amplifier presents both XLR/jack (Combo) balanced inputs, XLR output link, volume and a switchable EQ Mode (Flat/ Boost). The amplifier features a solid mechanical aluminium structure which not only stabilize the amplifier during transportation but also assist in the heat dissipation.
ART 708-A amplifier is mounted on an aluminium plate that integrates the rubber-coated aluminium top handle. This structure design results in a stronger and easy to transport cabinet.
All the transducers in the Art 7 Series speakers feature light weight neodymium magnets in order to guarantee a better performance and make for easier transportation. The compression driver uses a 1" throat diameter titanium dome featuring a vented suspension and is powered from a massive high flux neodymium magnet and an edge wound 1,75" aluminium voice coil. This top class driver offers a high output, transparent midrange sound and clarity in high frequencies reproduction.
ART 708-A features a 8" inch woofer that, with a 2,5" inside-outside aluminium coil and a powerful magnetic structure, guarantees a fast and accurate mid-bass frequency range.
The new loudspeaker design looks aggressive whilst retaining familiar Art ergonomics and is the result of extensive combined functional and acoustic research.
ART 708-A features two M10 threated fly points, one at the top one at the bottom, for installation purposes with vertical "U" bracket.
A steel front grille with a special foam on the inside is provided. The amplifier presents both XLR/Jack (combo) balanced inputs and XLR output link.
The back shape of the speaker is ideal also for monitoring, in left or right position

### ACOUSTICAL SPECIFICATIONS

| | |
|---|---|
| Frequency response: | 65 Hz- 20 Khz |
| Max SPL: | 128 dB |
| Horizontal coverage angle: | 90° |
| Vertical coverage angle: | 70° |
| Compression driver: | 1" neo, 1.7" voice coil |
| Woofer: | 8" neo, 2.5" voice coil |

### INPUT SECTION

| | |
|---|---|
| Input signal (Impedance): | bal/unbal |
| Input/Output connector: | combo XLR, Jack / XLR |
| Input sensitivity: | +4 dBu |

### PROCESSOR SECTION

| | |
|---|---|
| Crossover frequencies: | 1800 Hz |
| Protections: | thermal, hf |
| Sensitivity control: | yes |
| Limiter: | soft limiter |
| High pass: | - |
| Controls: | EQ shape |

### AMPLIFIER

| | |
|---|---|
| Power supply: | switching 700 Watt |
| High frequencies: | D / 200 Watt |
| Low frequencies: | D / 500 Watt |
| Cooling: | convenction/forced |
| Connection: | PFC |

### PHYSICAL

| | |
|---|---|
| Height: | 480 mm (18.8") |
| Width: | 291 mm (11.4") |
| Depth: | 274 mm (10.7") |
| Weight: | 9.6 kg (21.16 lbs) |
| Cabinet: | Composite PP |
| Hardware: | - |
| Handles: | 1 on top |
| Pole mount cap | yes |
| Colour: | Black |

# ART 708-A

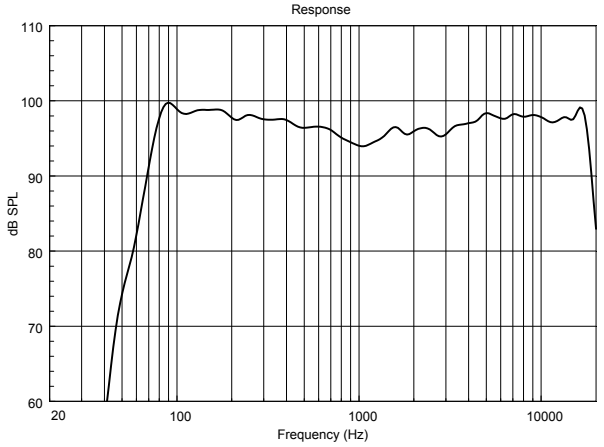
Response
dB SPL
110
100
90
80
70
60
20
100
1000
10000
Frequency (Hz)

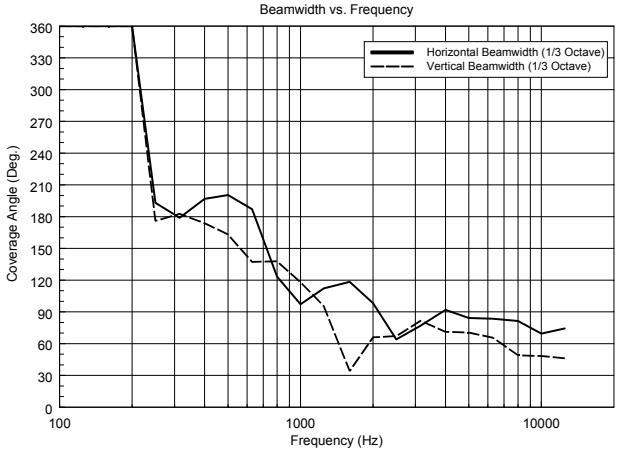
Beamwidth vs. Frequency
Horizontal Beamwidth (1/3 Octave)
Vertical Beamwidth (1/3 Octave)
Coverage Angle (Deg.)
360
330
300
270
240
210
180
150
120
90
60
30
0
100
1000
10000
Frequency (Hz)

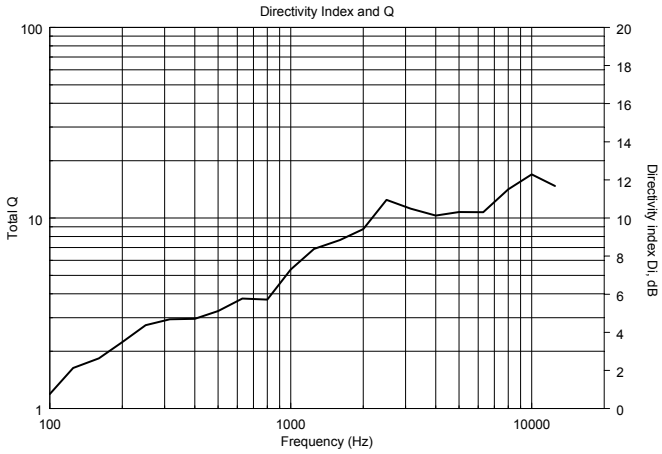
Directivity Index and Q
Total Q
100
10
1
Directivity index Di, dB
20
18
16
14
12
10
8
6
4
2
0
100
1000
10000
Frequency (Hz)

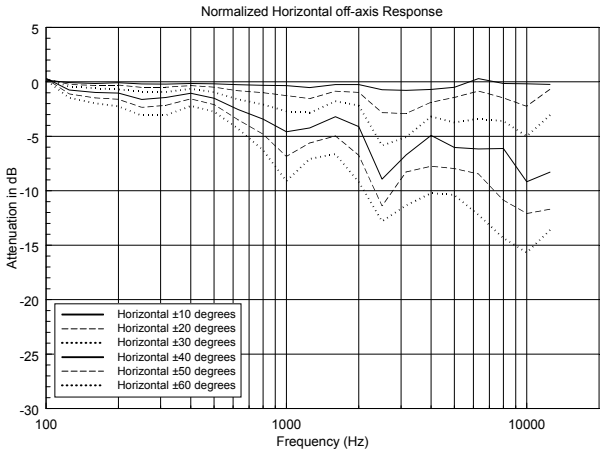
Normalized Horizontal off-axis Response
Attenuation in dB
5
0
-5
-10
-15
-20
-25
-30
Horizontal ±10 degrees
Horizontal ±20 degrees
Horizontal ±30 degrees
Horizontal ±40 degrees
Horizontal ±50 degrees
Horizontal ±60 degrees
100
1000
10000
Frequency (Hz)

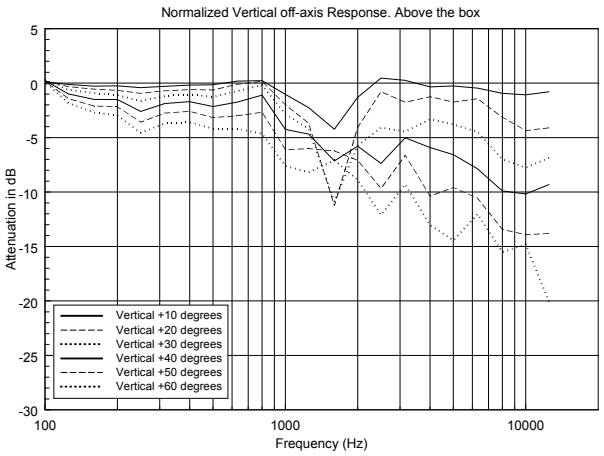
Normalized Vertical off-axis Response. Above the box
Attenuation in dB
5
0
-5
-10
-15
-20
-25
-30
Vertical +10 degrees
Vertical +20 degrees
Vertical +30 degrees
Vertical +40 degrees
Vertical +50 degrees
Vertical +60 degrees
100
1000
10000
Frequency (Hz)

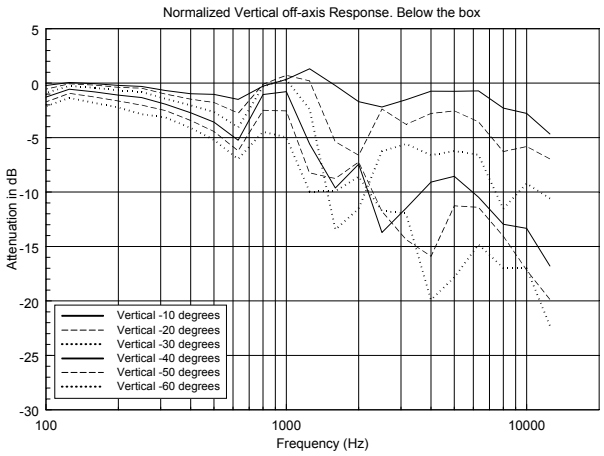
Normalized Vertical off-axis Response. Below the box
Attenuation in dB
5
0
-5
-10
-15
-20
-25
-30
Vertical -10 degrees
Vertical -20 degrees
Vertical -30 degrees
Vertical -40 degrees
Vertical -50 degrees
Vertical -60 degrees
100
1000
10000
Frequency (Hz)

# ART 708-A

## HORIZONTAL 1/3 POLAR PLOT

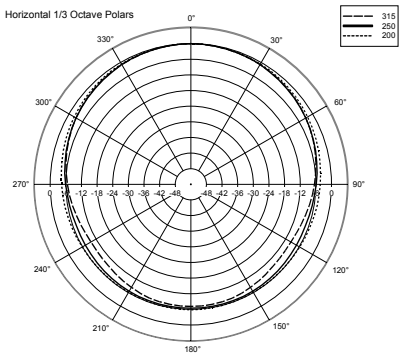


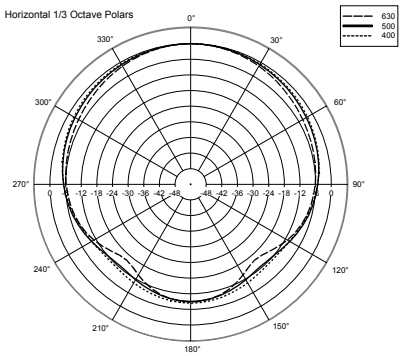


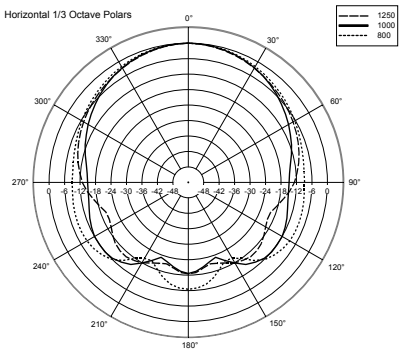


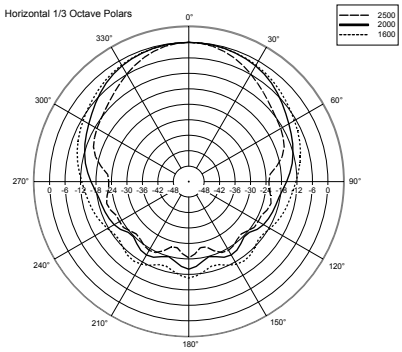


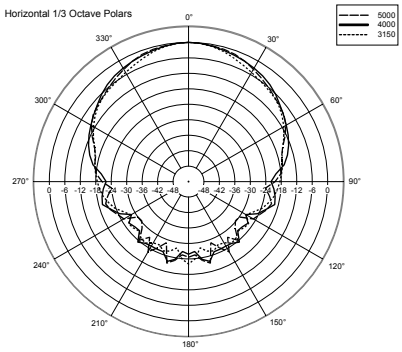


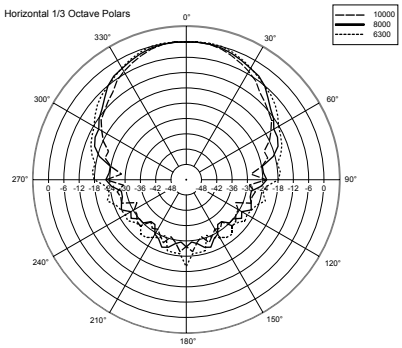


## VERTICAL 1/3 POLAR PLOT

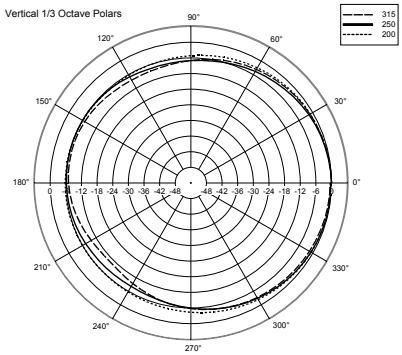


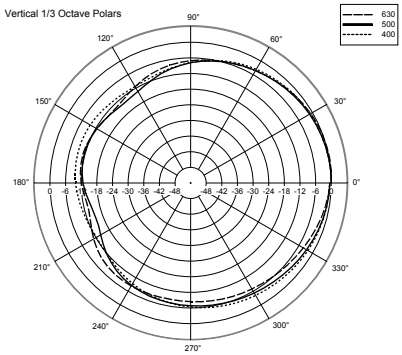


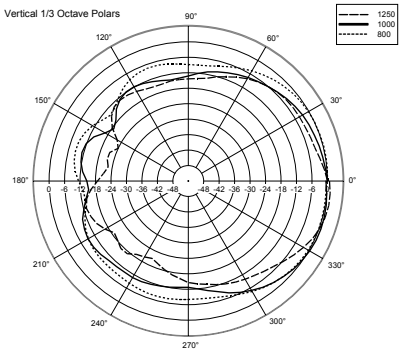


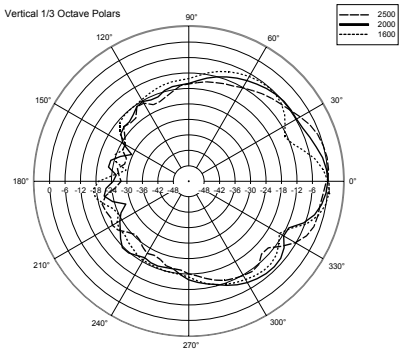


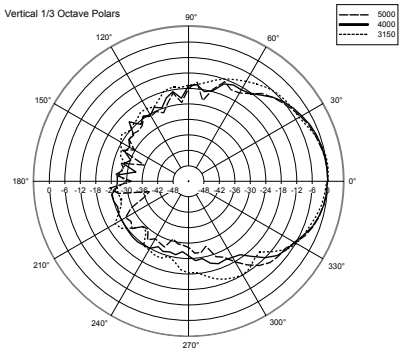


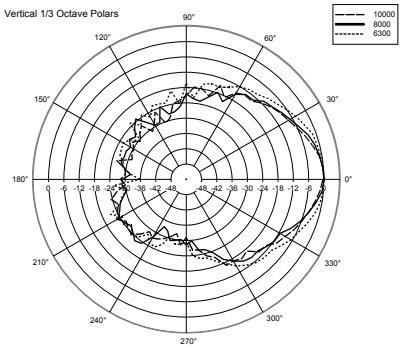

# ART 708-A

1.0-I-M

## PART NUMBERS

13000196 - 230VOLT

13000197 - 115 VOLT

## DIMENSIONS (All data are in mm)

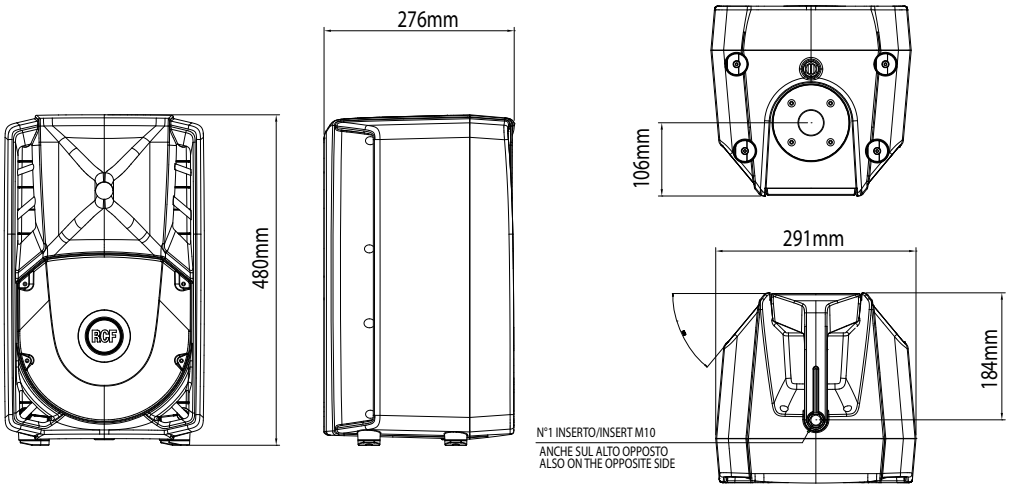


## ACCESSORIES

| | |
|---|---|
| AC PMA | Speaker pole mount. |
| AC PRO-PM | Steel pole mount accessory for a satellite loudspeaker on a subwoofer. Both ends of the pole mount are fitted with an expanding mandrel system for a tight and vibration-free fit for the base and satellite speakers. |
| AC PRO-FS | Steel speaker floor stand with folding base and telescopic rod. Tube diameter 35mm. Load capacity up to 50kg. |
| AC PRO-LF | Steel professional adapter sleeve for loudspeaker stands. Integrated expanding mandrel system which provides a tight and firm fit for the speaker. |
| AC S140 | Aluminum speaker floor stand with folding base and telescopic rod, Tube diameter 35mm. |
| AC S260 | Steel speaker floor stand with folding base and telescopic rod, tube diameter 35mm. |
| AC EB4X | Kit including no.4 shouldered 10mm eye bolts. |

RCF products are continually improved. All specifications are therefore subject to change without notice.