HD 310-T

ALUMINIUM HORN SPEAKER WITH DRIVER

DESCRIPTION

HD 310/T is a horn loudspeaker with a 30 W driver, suitable for outdoor applications (IP rating: 66).
Its compression driver has a polyimide diaphragm to prevent deformation from heat and improve low frequency response.
It includes a transformer inside for the connection to 100 – 70 V constant voltage lines.
When connected to a 100 V line, its power can be selected among the values 30 W, 20 W, 10 W or 5 W through a rotary switch.

MAIN FEATURES

- Power: 30 W RMS
- Frequency response: 240 Hz ÷ 10 kHz
- Max. sound pressure level: 123 dB (30 W, 1 m)
- 100V multi-tap transformer included
- Simple power setting through a rotary switch
- Low frequency protection: high-pass filter (6 dB/oct).
- Easy to install

MAIN APPLICATIONS

- • Car parks
- • Bathing establishments
- • Stadiums
- • Fun resorts

SPECIFICATIONS

Loudspeaker	Round, with driver unit and transformer
Power (on 8 Ohm load)	30 / 45 W (RMS / Music power)
Power	30 W - 20 W - 15 W - 10 W - 5 W (100V)
Sensivity	108 dB (1 W / 1 m)
Mx. SPL	123 dB(A) (1 m / POWER MAX)
Frequency Response	240 Hz – 10 kHz
Angle of coverage	80°
Connector	2 conductor cable
Body colour	Grey RAL 7035
Main body material	Aluminium
Connection cable length	1 meter
Dimensiones	Ø 310 mm x 315 mm
Installation	"U" Bracket stainless steel
Max wall distance	77 mm
Net weight	3.1 kg
Operating temperature	-25° to +55°
Relative humidity	90% non condensing

HD 310-T

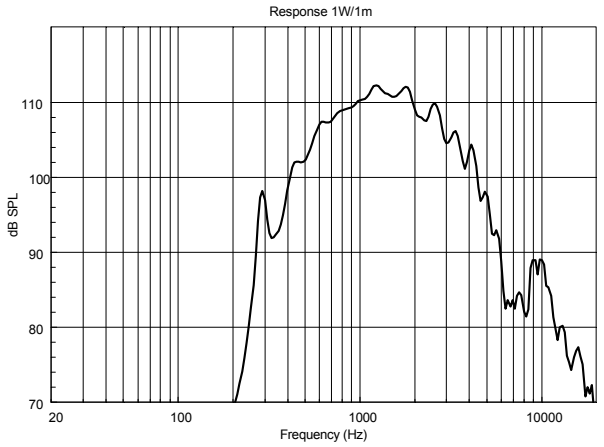
Response 1W/1m
dB SPL
110
100
90
80
70
20
100
1000
10000
Frequency (Hz)

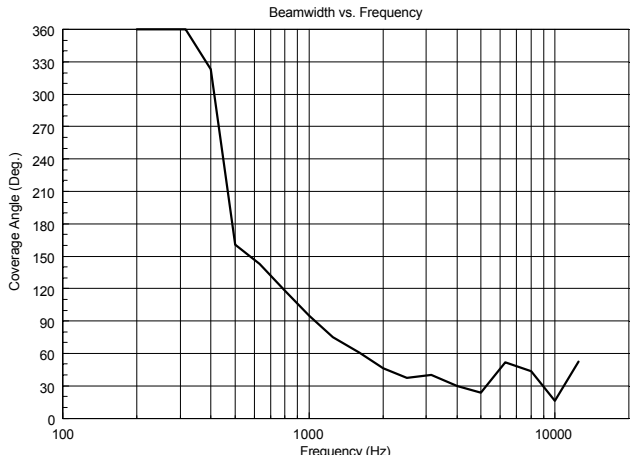
Beamwidth vs. Frequency
Coverage Angle (Deg.)
360
330
300
270
240
210
180
150
120
90
60
30
0
100
1000
10000
Frequency (Hz)

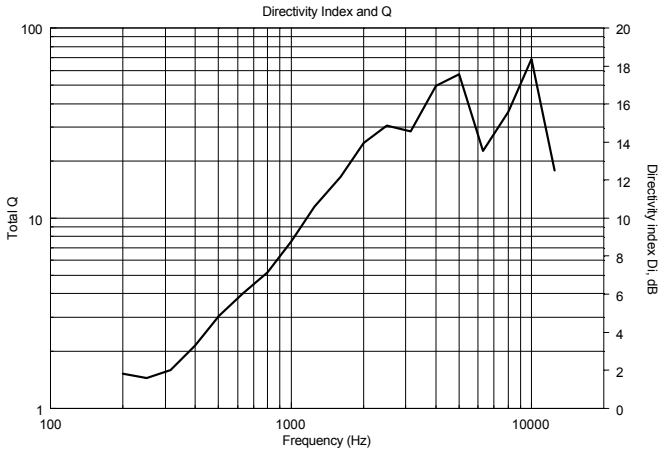
Directivity Index and Q
Total Q
100
10
1
Directivity index Di, dB
20
18
16
14
12
10
8
6
4
2
0
100
1000
10000
Frequency (Hz)

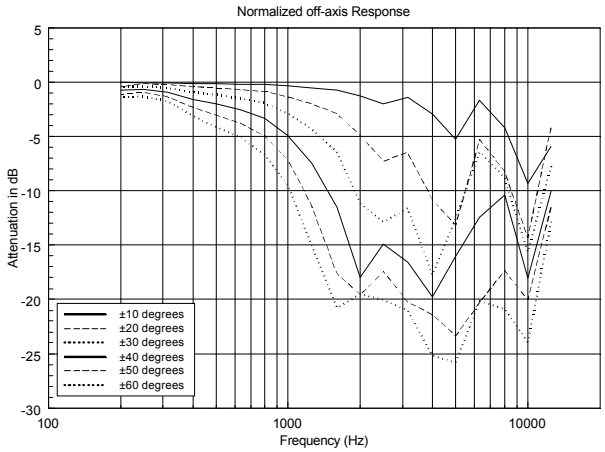
Normalized off-axis Response
Attenuation in dB
5
0
-5
-10
-15
-20
-25
-30
±10 degrees
±20 degrees
±30 degrees
±40 degrees
±50 degrees
±60 degrees
100
1000
10000
Frequency (Hz)

HD 310-T

HORIZONTAL 1/3 POLAR PLOT

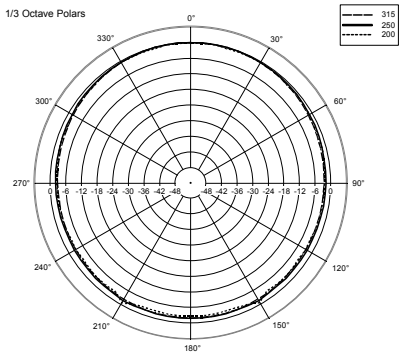

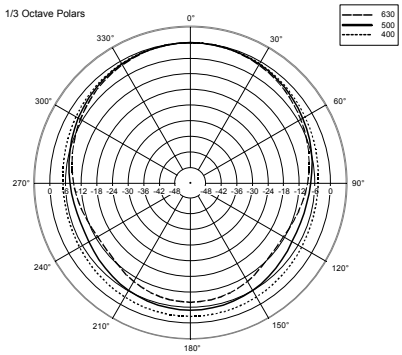

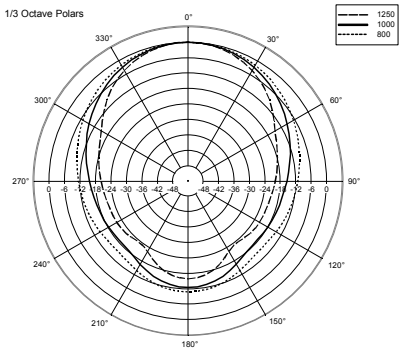

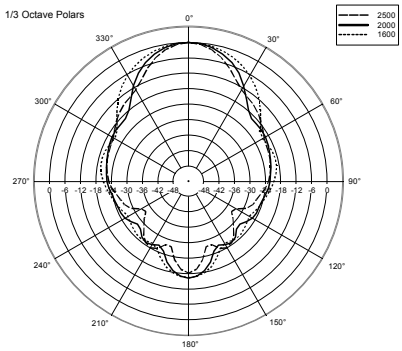

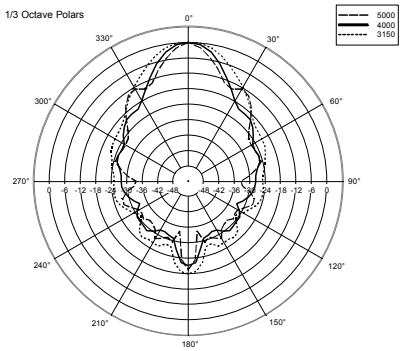

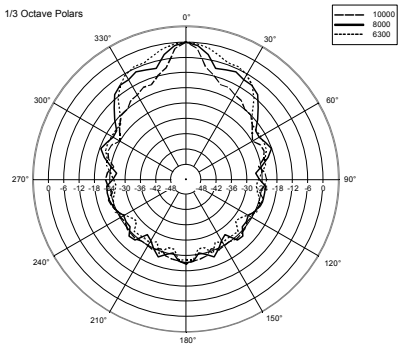

HD 310-T

PART NUMBERS
13130001

DIMENSIONS (All data are in mm)

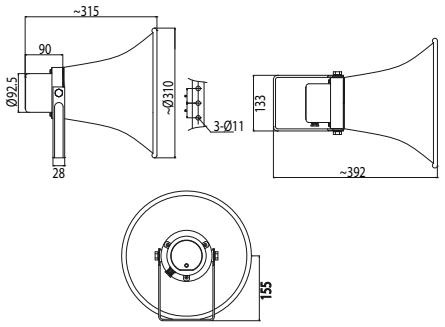

SCHEMATICS

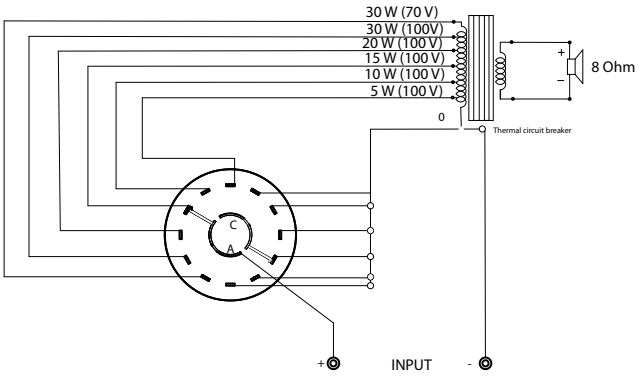

INSTALLATION NOTES

HD 310-T installation is quick thanks to its 'U' bracket, which can be fixed to the wall / ceiling through the holes on its base. The horn loudspeaker can be aimed to any direction.
The mounting bracket, the bracket holder and the horn flare are made of aluminium and screws, bolts and nuts are made of stainless steel.
The rear cover is made of high density UV resistant self-extinguishing polystyrene.

POWER SELECTION

Set the rotary switch to selected the chosen power value referring to either the 100 V or 70 V line.

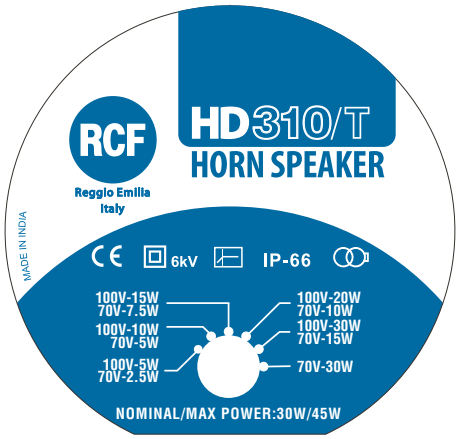

CERTIFICATIONS AND APPROVALS

- CE: it complies with European Community 73/23/EEC and 93768/EEC
- Self-extinguishing plastic according to UL 94V0
- IP rating: 66
- Speaker data according to IEC 268-5
- Electronic apparatus safety requirements according to IEC EN 60065:2002

ACCESSORIES (included)

- U Bracket stainless steel

2.0-J-L

www.rcf.it

RCF products are continually improved. All specifications are therefore subject to change without notice.