IS 1044

INTERNET RADIO AND USB/MP3 PLAYER WITH FM RADIO TUNER

DESCRIPTION

IS 1044 is a dual sound source, built on two independent section that can be used at the simultaneously.
The IS 1044 is a 1U rack-mount unit featuring a Internet radio with Wi-Fi digital receiver / traditional FM tuner and a digital flash-based audio player. Through internet connection, the choice among more than 10.000 broadcasting stations from all over the world.
The high-quality digital receiver includes Wi-Fi 802.11b/g and an Ethernet (RJ 45) port, allowing to choose among a lot of radio stations all over the world, searching according to the nation or the kind of music.
The Tuner with high-sensitivity front-end and quartz-locked digital tuning ensure low noise signal processing and drift-free reception of stereo FM (87.5 ÷ 108 MHz) with RDS for the quick selection of preferred radio stations.
Supported streaming protocols: RTSP (Real Time Streaming Protocol), MMS (Microsoft® Media Server protocol), HTTP (Hyper Text Transfer Protocol).
The media player is compatible with Microsoft ® 'Windows Media Player 11' on the following operating systems: Microsoft® Windows XP, Windows Vista.
It is also equipped with an USB flash drives and 'Secure Digital' (SD) cards (compatible for 'Multi Media Cards') to play MP3 and WMA files.
Each section has a separated stereo output (RCA connectors), an independent volume control on the unit front panel and a dedicated backlit LCD.
With an IR receiver the IS 1044 fits into any and all pro audio environments requiring the playing of Internet and FM Radio locally or remotely.

CERTIFICATIONS AND APPROVALS

- CE comply with European Community 2006/95/CE LVD Directive and 2004/108/CE EMC
- Directive Immunity according to R&TTE 1999/5/EC referred to the standard EN 60950-1:2006, EN 301 489-v1.7.1, EN 61000-3-2:2006, EN 61000-3-3 :1995+A1:2001+A2:2005, EN 300 328-v1.7.1
- Safety according to IEC EN 60065:2002
- Wireless comply with IEEE 802.11b 802.11g, Ethernet IEEE 802.3

INSTALLATION NOTES

The IS 1044 can be either installed into a 19" rack cabinet (1 unit) thanks to its rack ears or put on a desk (after taking its rack ears off by removing the 4 screws on each side).
To ensure proper heat dissipation, install the player while leaving clearances of 0,1 m between the player and wall or other components.

MAIN FEATURES

- Double sound source with two independent sections and outputs (Radio – CD / MP3)
- IR Remote control for Radio / MP3 player functions
- USB port available on front panel
- SD card port is available on front panel
- FM radio tuner (87.5 - 108 MHz) with RDS for fast selection of the radio frequencies
- High quality WiFi 802.11b/g digital receiver and ethernet port
- 2 Balanced Audio Output with volume control
- Priority Audio Output of the CD / MP3 player signal to the FM tuner
- The multimedia reader can manage audio (AAC, AIFF, AU, MP3, RM, WAV and WMA) and wireless musical lists (M3U) stored on a PC or Apple Macintosh.
- Streaming protocols: RTSP (Real Time Streaming Protocol), MMS (Medium Microsoft® Media Server protocol), HTTP (Hyper Text Transfer Protocol)
- Its functions are tried and certificated for Windows 2000, Windows XP, Windows Vista and Macintosh OSX 10.2 or successive versions.
- LCD backlit display gives information on the MP3 files
- LCD backlit display shows the frequency and stations

MAIN APPLICATIONS

- Restaurants
- Boutique
- Pub
- Beauty Centre
- Market
- Fitness Centre / Gym
- Hotels
- Broadcast

ACCESSORIES (included)

- 1 FM indoor antenna
- 1 WiFi indoor antenna
- Pair of ear brackets for the 19" rack installation
- Remote control unit
- 2 Pair audio RCA cable 2.5 mt length
- AC Power cord
- User's Guide
- Warranty Card

ACCESSORIES (not included)

- AR 3000 rack mounting support 3 units (code 133 60 101 Optional)
- BM 3001 microphone console with CAT5 cable and RJ 45 connector (code 143 22 008 Optional)

IS 1044

FRONT PANEL & REAR PANEL

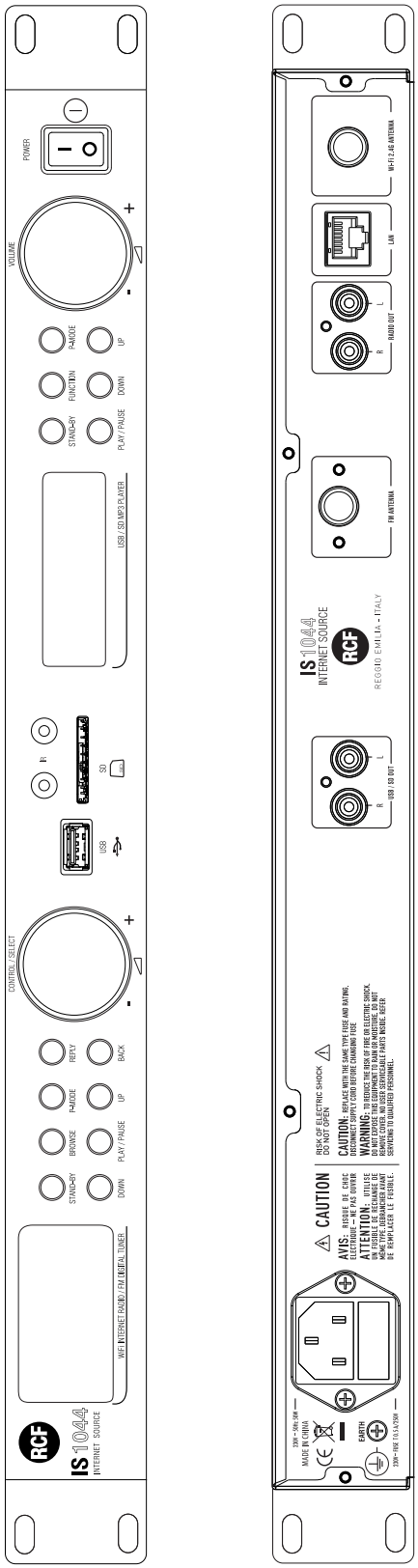

IS 1044

SCHEMATICS

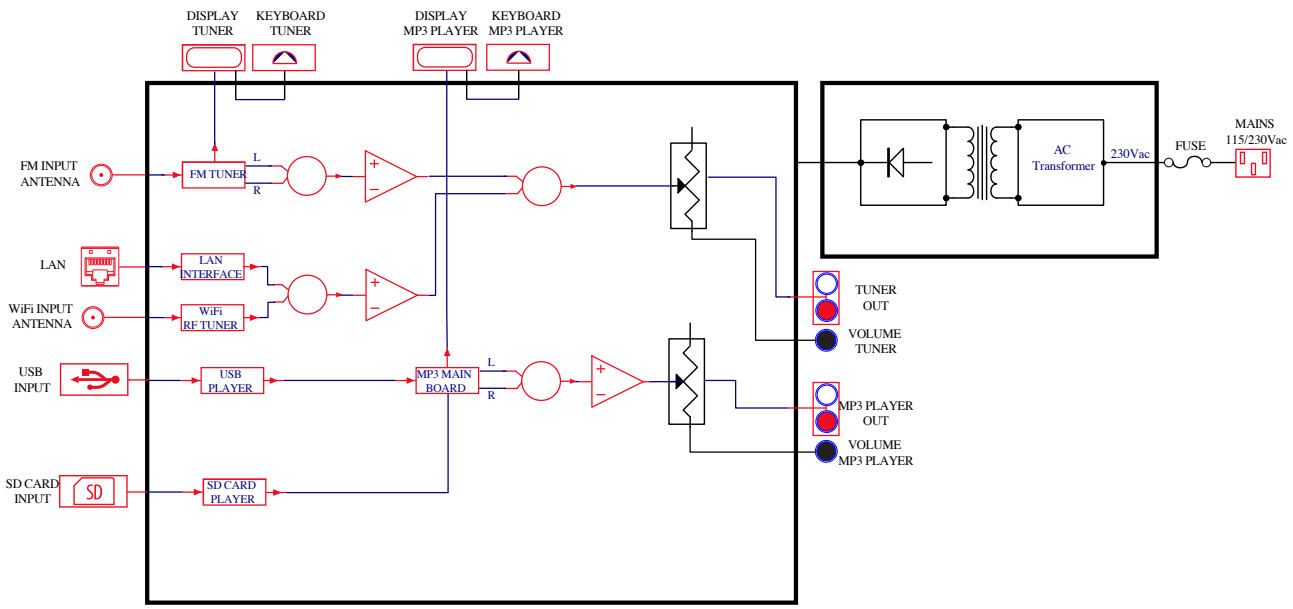

IS 1044

PART NUMBERS

17170108

1.0-J-J

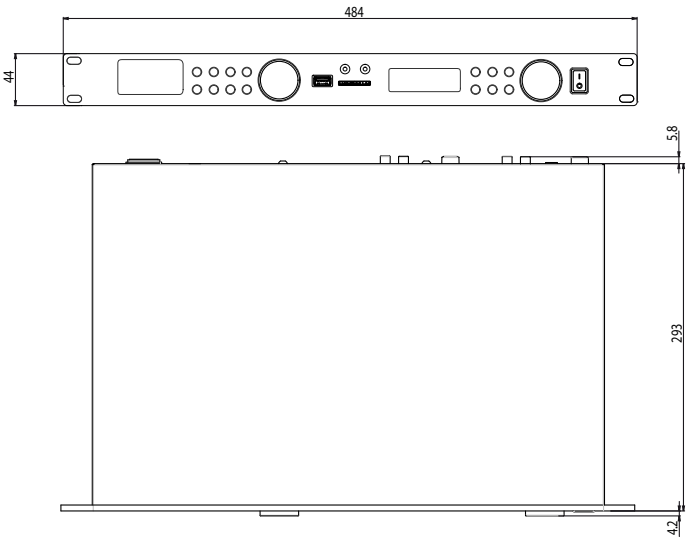

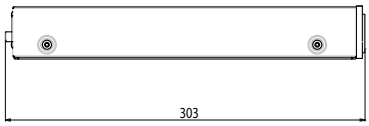

DIMENSIONS (All data are in mm)

SPECIFICATIONS

GENERAL	
Protections Power supply	Fuses (T0.5A - 250 V)
Operating voltage	220÷240 ~ 50 / 60 Hz
Power (consumption)	15 W
Dimensions (w, h, d)	444 x 44 x 303 mm
Net weight	3.6 kg
Operating temperature	-25° to +55°
Relative humidity	90% non condensing

RADIO TUNER	
FM range	87.5 ÷ 108 MHz
FM frequency response	100 Hz ÷ 12 kHz
FM channel separation (1 kHz)	≥ 25 dB
FM Intermediate rejection	≥ 60 dB
FM Image rejection	≥ 25 dB
FM signal / noise ratio	≥ 50 dB
Input Sensitivity	6 µV e.m.f.
Max. output level (1 kHz)	- 1 dBu
Total harmonic distortion (1 kHz)	< 1 %
Antenna input	75 Ω – Coaxial

MEDIA PLAYER	
Audio output level	+ 2 dBu
Frequency response	20 Hz ÷ 20 kHz (it also depends on played files)
Signal / noise ratio	≥ 80 dB
Total harmonic distortion (1 kHz)	< 0.15 %
Stereo separation	≥ 60 dB

www.rcf.it

RCF products are continually improved. All specifications are therefore subject to change without notice.