BUSINESS MUSIC

RCF Sound Culture

RCF is one of the oldest manufacturers of professional audio equipment, loudspeakers, electronics, DSP, and custom solutions for any sound and place.

Since 1949, RCF has been committed to the perfect reproduction and amplification of sound for events and concerts, recording, public address, broadcast, and Hi-Fi/portable audio. Italian design excellence in the audio universe. All products and components design and development take place in-house to ensure maximum quality and reliability. The comprehensive catalog covers all aspects of the audio chain and meets musicians, sound engineers, architects, and system integrators' requirements.

Innovation comes first and foremost, thanks to the RCF R&D team, creators of many original products and technologies, such as the hyper-venting system, the inside/outside voice coil, the dual silicone spiders, and countless mechanical, digital, and leading-edge electronic solutions. RCF is always at the forefront of new technologies and materials, providing tools, documentation, technical support, and training to help professionals deliver the best sound to the listener. RCF has always shared its engineers' knowledge, experience, and skills in training all audio professionals and enthusiasts. Simultaneously, the internal support engineering team is on hand to assist architects, system designers, or integrators during the design and customization of complex systems.

The solid technical expertise built on nearly 70 years of history, the modern Italian manufacturing facility, and the continuous technological improvement make RCF an essential reference for all audio professionals and enthusiasts. You can find RCF everywhere, in concert venues, recording studios, airports, conference halls, discotheques, public spaces, clubs, cruises, or in the hands and houses of countless musicians.

/ INTEGRATION

RCF is one of only a few loudspeaker manufacturers worldwide who completely manufactures transducers, speaker systems and amplification and control electronics.
Our portfolio is one of the most comprehensive in the market place today offering true integrated audio solutions.

/ QUALITY FIRST

The success of our products starts with the design and the choice of the highest quality components. Each detail of an RCF product is realized following the strictest design and construction criteria, which guarantee maximum performance in all circumstances and maximum reliability over time.

New perspective on linearity

FiRPHASE
When paired with RCF digital matrix amplifiers, RCF BUSINESS MUSIC speakers feature an advanced FiR filtering technology, conceived to deliver transparent sound, absolute clarity, and perfect stereo images to the listener. The special FiRPHASE filters allow for coherent distribution of sound for all listeners without phase distortions, ensuring minimum latencies in the system.

Networked management

RDNet READY
The RCF RDNet software is the perfect tool to configure and manage RCF units in any venue. It helps to monitor and control all DSP settings and ensure the best system's performance. RDNet is a secure and robust management tool for small, medium, and large-sized systems and complex and extended installations. Based on a proprietary network protocol RDNet, it provides straightforward monitoring and intuitive control of the RCF audio system down to every connected device/object.

/ SOLUTION PROVIDER

From architectural design and industry standard speakers to digital steerable arrays, from compact near field two-way systems to large horn-loaded formats, all RCF solutions designed for fixed installations uncompromised sound performance together with components highest quality and conformity to all required international standards.

/ CUSTOMERS SUPPORT

RCF has always been committed in providing complete support to its customers helping them to choose the most suitable solutions for their projects. The involvement in complex projects around the world is continually raising the know-how and experience of our team, considered one of the best Engineering Support Group in our industry.

RCF Business Music

COMPLETE AUDIO SOLUTIONS

The RCF BUSINESS MUSIC range marks a new standard in high-quality music reinforcement. Scalable and flexible architectures, providing architects and installers with application-focused products conceived for both background and foreground music. It is the perfect solution from small to large installations, distributing several audio feeds in multiple environments, each with specific volume and equalization needs.

/ IMPROVE THE AUDIO ATMOSPHERE

Music nurtures engagement and improves the feeling of hospitality provided by the environment. All products designed for BUSINESS MUSIC applications offer optimal background performance preserving the same quality even in high-powered foreground music.

/ DISCREET POWER

Our designers maintain a strong focus on simplicity without compromising usability. The smooth and subtle design perfectly blends with any architecture without compromising sound performance and installation ease.

The target application range is extensive and varies from retail stores to bars and restaurants, meeting rooms, education, sport or public facilities, and in general, to any A/V application. From small to large systems, the RCF BUSINESS MUSIC range provides the smartest solution, blending uncompromised sound quality, full processing features, exceptional power, easy configuration, and high scalability.

/ EASY AND FLEXIBLE CONFIGURATION

Flexible and easy for any user, the configuration is crucial for the success of a sound reinforcement system. BUSINESS MUSIC line offers different configuration levels, from the user-friendly front panel control interface to remote RDNet control for large and complex systems.

/ SCALABLE ARCHITECTURE

Control units can distribute multiple audio channels to satellite units on a single CAT5 cable: this allows an increase of the installed power and creates a multi-room architecture, with easy devices connection.

DMA

DIGITAL MATRIX AMPLIFIER

TWO CHANNELS MATRIX AMPLIFIER

DMA is a two channels Class-D mixer amplifier equipped with a powerful DSP platform, allowing managing inputs and outputs in terms of routing and equalization: a complete set of processing functions is available, including PEQ, FIR filters, bass enhancement, limiters, compressors and environmental equalization.
Moreover, specific presets for RCF speakers have been implemented, and can be selected to optimize their acoustic performance.
DMA features an extremely compact size and accurate design that, together with its environmental robustness, make it ideal for a wide range of applications, from retail stores to bars and restaurants, meeting rooms, education or public facilities, and more in general to any A/V application.
Moreover, it is suitable for both desk top or rack installation (thanks to the dedicated optional accessory).
Each unit offers 2 stereo LINE inputs on RCA connectors and 1 MIC+LINE balanced input on removable screw terminals. A LINE output is also available, with low pass filter facility for the connection to an active subwoofer.
A dedicated paging input on RJ 45 connector allows the connection of up to 4 paging consoles BM 404, interlocked on a single chain.
A wall mount remote control RC 401 can be connected to each output channel to adjust volume level and select the desired input.
DMA can distribute 4 audio channels to satellite DPA units on a single CAT5 cable BUS, combining a flexible and scalable multi-room architecture with an easy connection and installation.
Configuration is also very user friendly, and can be done through the front panel controls (with OLED display), or RDNet (using the optional board).

RDNET READY

- Class-D power amplifier
- 20 ÷ 20000 Hz frequency range
- Full on-board processing
- RCF speakers presets
- FiRPHASE
- Proprietary bass enhancer algorithm
- RDNet ready
- Suitable for desktop or rack installation (optional accessory required)
- Flexible and scalable multi-room architecture
- MUTE command for the connection to Voice Alarm Systems
- 44x213x314 mm - 1.73”x8.39”x12.36” (HxWxD)
- 3 kg - 6.61 lb

DMA 82
2 x 80 W RMS power handling (@ 4 ohm)
p.n. 12100026 (EU) - 12100040 (US) - 12100043 (UK)

DMA 162
2 x 160 W RMS power handling (@ 4 ohm)
p.n. 12100027 (EU) - 12100041 (US) - 12100044 (UK)

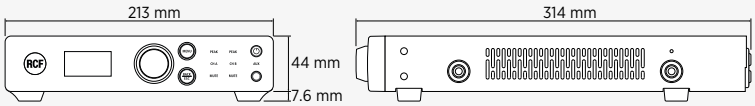

FRONT PANEL

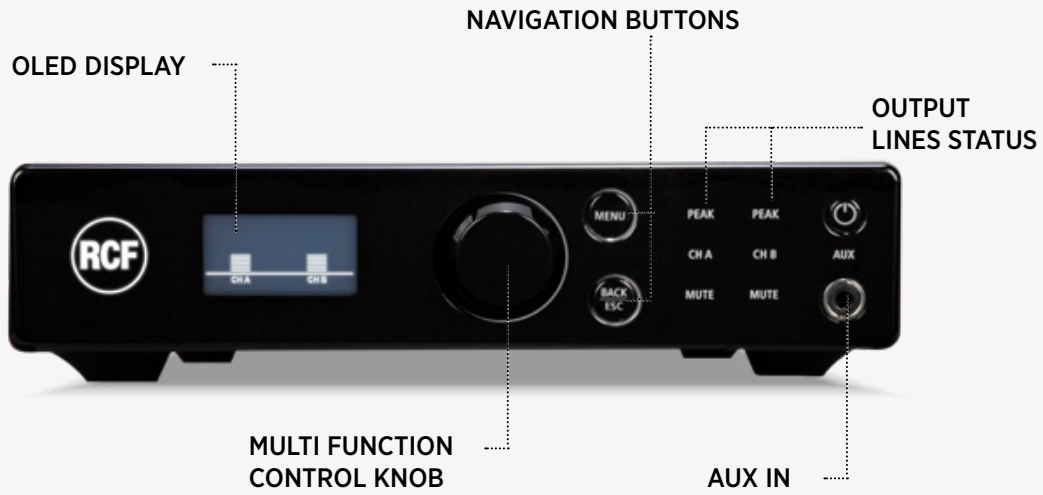

REAR VIEW

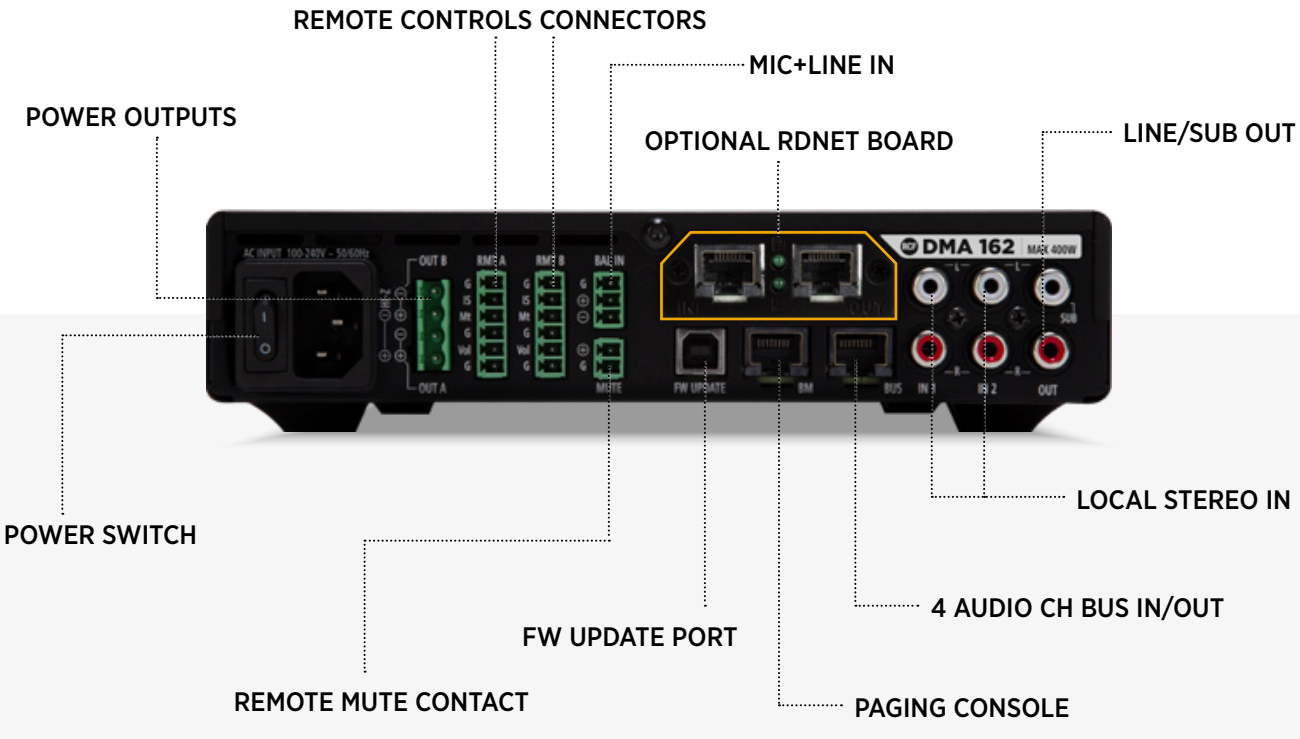

162P

DIGITAL POWER AMPLIFIERS

TWO CHANNELS POWER AMPLIFIER

DMA 162P is a two channels class-D power amplifier, equipped with on-board signal processing. Its natural use is in combination with a DMA 82 or DMA 162P unit, in order to increase Commercial Audio systems installed
power and to implement multi-room architectures. However, its configurability, control tools and available inputs allow to use it as a stand alone amplifier.
DMA 162P features an extremely compact size and accurate design that, together with its environmental robustness, make it ideal for a wide range of business music applications, from retail stores to bars and restaurants, meeting rooms, education or public facilities, and more in general to any A/V application. It offers easy configuration through DIPSWITCH or (optional) RDNet board.
DMA 162P can receive processed audio signal from DMA unit on a 4 channels audio BUS (2 mono or 1 stereo), or in alternative, it is possible to select the local stereo LINE input using the dedicated contact.
A LINE output is also available, with low pass filter facility for the connection to an active subwoofer.
Configuration is easy and flexible, and can be done with DIP-SWITCH on the rear panel, or RDNet (using the optional board).

RDNET READY

- 2 x 160W RMS Class-D power amplifier
- 20 ÷ 20000 Hz frequency range
- Full on-board processing
- FiRPHASE
- RCF speakers presets
- Proprietary bass enhancer algorithm
- Flexible and scalable multi-room architecture
- Suitable for desk-top or rack installation
- MUTE command for the connection to Voice Alarm Systems
- 44x213x304 mm - 1.73”x8.39”x11.97” (HxWxD)
- 4 kg - 8.82 lb

DMA 162P

320 W RMS power handling (@ 4 ohm)

p.n. 12100028 (EU) - 12100042 (US) - 12100045 (UK)

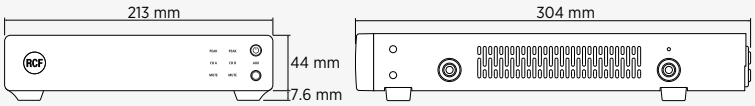

FRONT PANEL

REAR VIEW

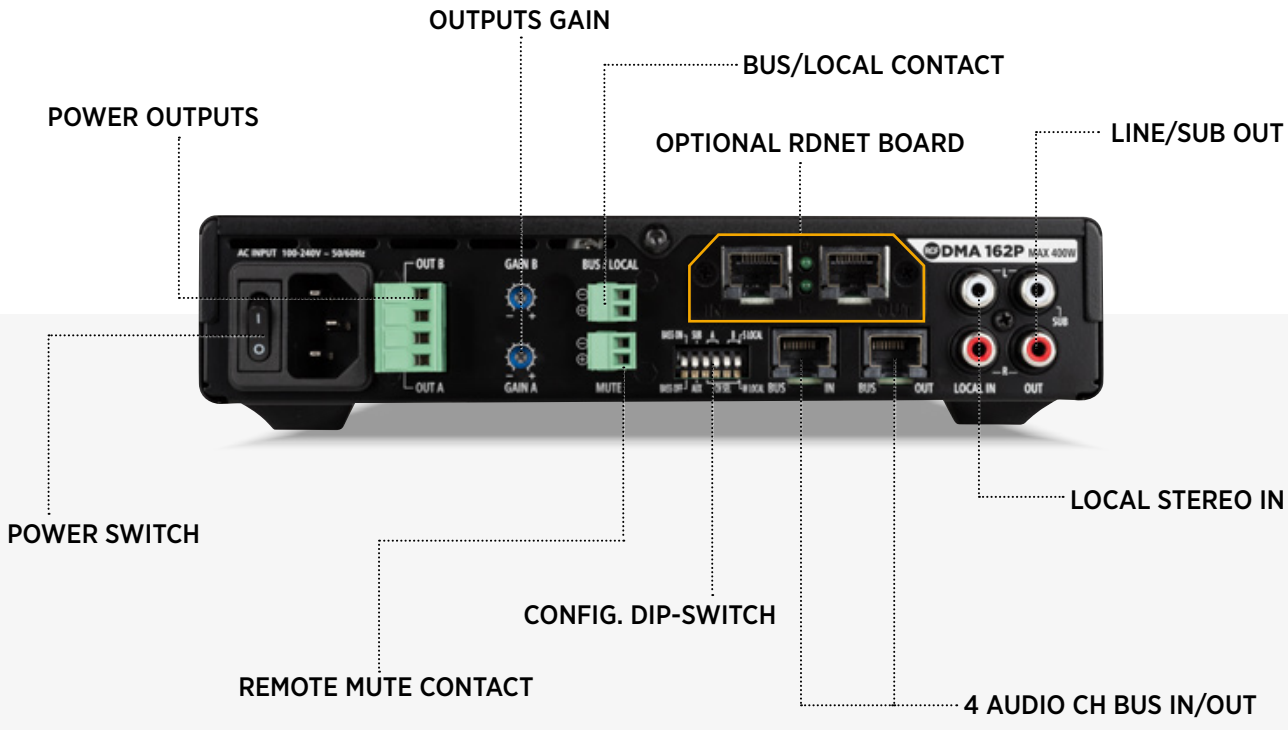

DMA ACCESSORIES

OPTIONAL RDNet BOARD

The RCF RDNet is the perfect tool to configure and manage DMA units setup in any venues. The software helps to monitor and control all DSP setting and to secure the best performance of the system configuration. RDNet is a secure and robust management for small, medium, and arena-sized sound systems as well as complex and extended installations. Based on a proprietary network protocol RDNet provides straightforward monitoring and intuitive control of the RCF audio system down to every connected device/object.

RDNET BOARD DMA

p.n. 12399048

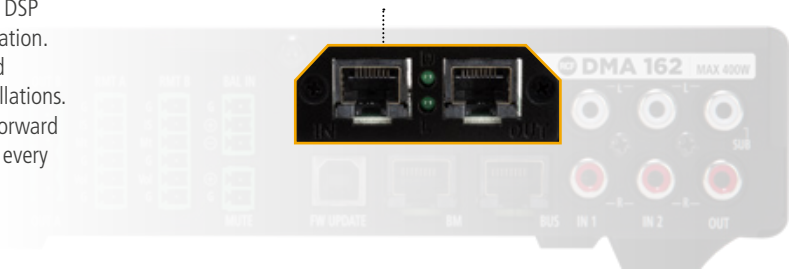

UNITS CONNECTION

DMA units can distribute 4 audio channels to DMA 162P satellite units. This allows to increase the installed power and create a multi-room architecture.
Connection can be done with just 1 CAT 5 CABLE.
Each DMA 162P unit can be differently set (using the DIP-SWITCH on the rear panel) to receive the desired channels.

RM-KIT DMA - RACK MOUNT KIT

It is an accessory allows to install one or two DMA amplifier units inside standard 19" rack cabinets. In case of a single amplifier, a blind panel is included to close the empty half rack unit. It also includes a set of brackets for amplifier wall mount installation.

p.n. 13360426

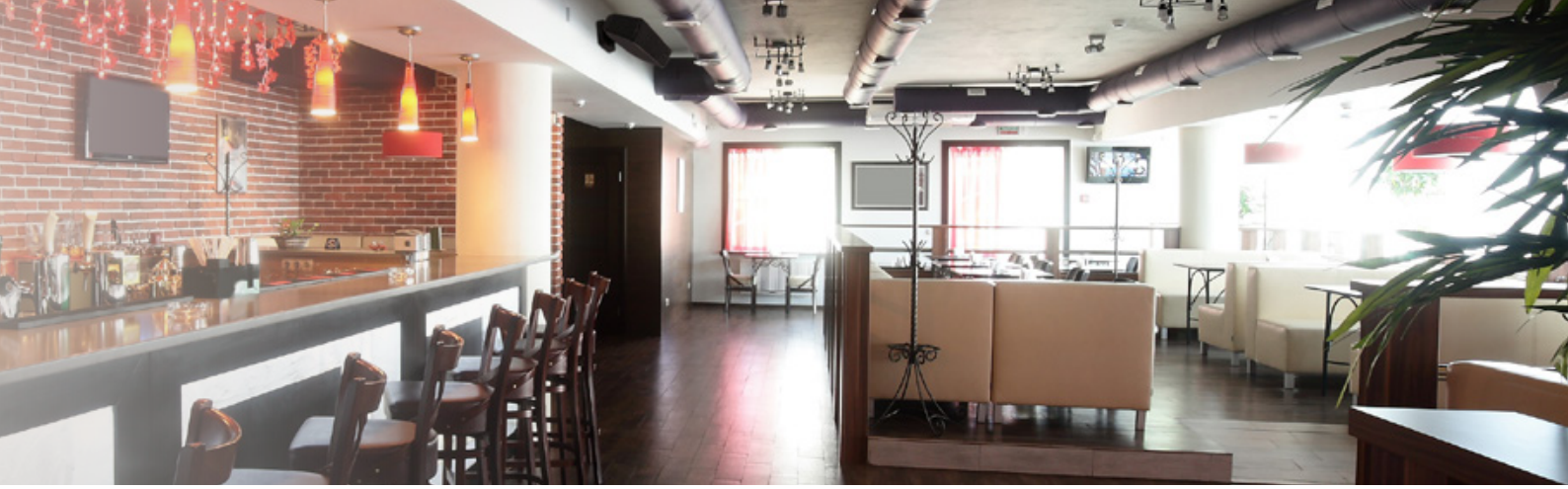

BM 404 - DESKTOP PAGING CONSOLE

BM 404 is a desktop paging console that allows making selective calls to 4 zones. Specifically designed as a complement for Business Music systems, such as DMA amplifiers, the console is made of a shock-resistant polymeric body, fitted with an electret microphone on a 230 mm gooseneck, and a polyurethane foam windscreen. Connect up to 4 consoles on a single chain (interlocked) to each amplifier with a CAT5 cable (included). Dedicated buttons with LEDs allow for microphone activation and zone selection. Chime tone is selectable with a single on/off switch. The RCF BM-404 is ready to use out of the box and does not require any configuration.

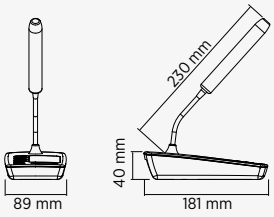

p.n. 14322031

RC 401 - WALL MOUNT REMOTE CONTROL

RC 401 is a wall mount remote that works in combination with DMA units. It can be connected to each DMA power output and allows adjusting the output volume, muting it or selecting the desired input program. Available in black and white colour.

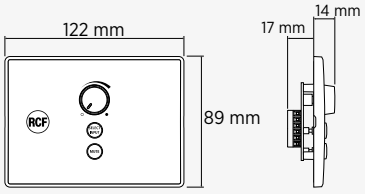

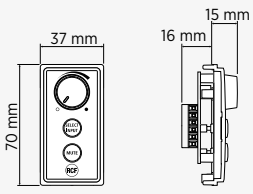

RC 401 EU B p.n. 12399051 (EU) Black - RAL 9005
RC 401 EU W p.n. 12399052 (EU) White - RAL 9003

RC 401 US B p.n. 12399053 (US) Black - RAL 9005
RC 401 US W p.n. 12399054 (US) White - RAL 9003

DMA CONNECT

OPTIONAL BT BOARD DMA

The BT BOARD is an additional board that allows to connect a DMA amplifier to a mobile device using Bluetooth 5.0 technology. This makes possible to send audio from the mobile device to the amplifier and at the same time control it, in terms of levels and equalization of inputs and outputs.

The DMA Connect app for Android and iOS provides wireless control of RCF DMA Series Business Music amplifiers. Thanks to its accurate and user-friendly interface, it gives access to DMA settings such as input and output levels, equalizers, routing, speaker presets selection, device information, and real-time VU-meters. Advanced settings for expert users are also available together with many useful features, including customizable names for input, outputs, and devices.

The app is available as a free download on Apple Store and Google Play store.
It shall be used in combination with BT BOARD DMA, the additional board that connects DMA amplifiers to mobile devices over Bluetooth, allowing audio streaming and control.

DMA Connect offers a complete set of configuration functions and real-time information:

- input settings (level, mute, 3-band equalizer)
- output settings (level, mute, bass-enhancer, routing, speakers' preset selection)
- global mute
- output signals graphic VU-Meters
- device information
- customizable device, input and outputs names
- advanced input management for more skilled users
- BT BOARD DMA firmware update

iOS and App Store are service marks of Apple Inc.
Android and Google Play are trademarks of Google Inc.

VU-Meters

It is possible to MUTE each channel, or both using the MUTE ALL button

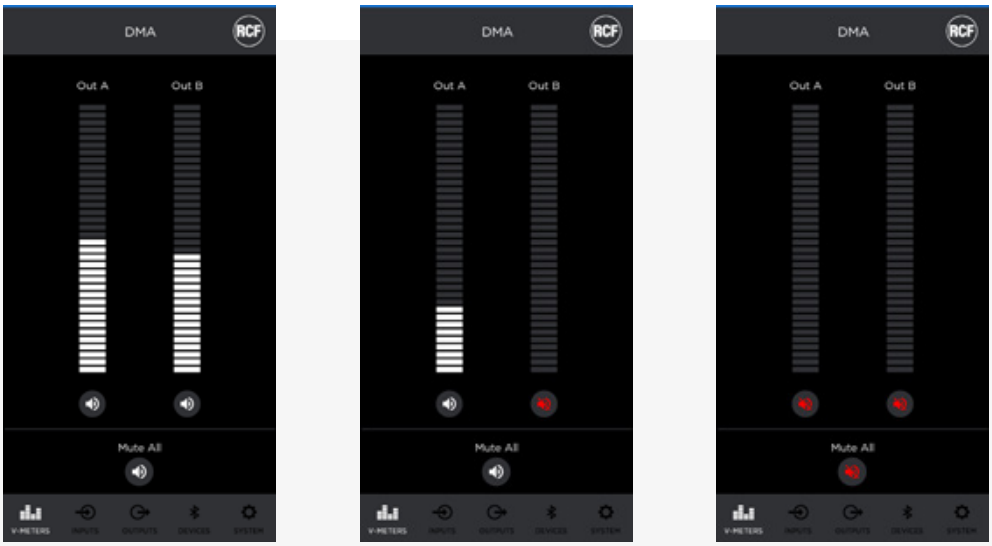

INPUTS

In the INPUTS screen, all available inputs can be selected and processed in terms of:

- Level
- Three band equalizer

INPUTS can be scrolled using the navigation arrows in the upper left area of the screen.

OUTPUTS

In the OUTPUTS screen, available outputs can be managed in terms of:

- Level
- Speaker Preset (password needed)
- Bass Enhancer activation
- Input Selection

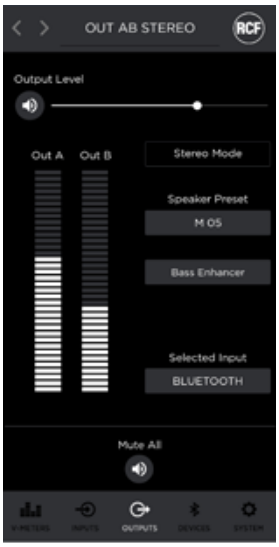

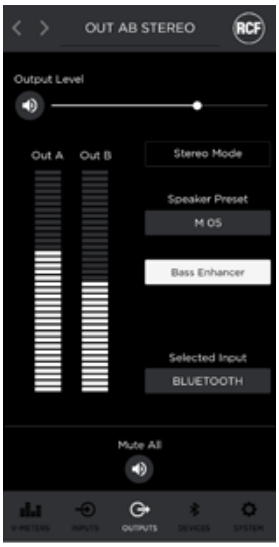

SYSTEM

In the SYSTEM screen, devices information are shown in a dedicated table, and these commands are available:

- Disconnect
- Advanced (password needed): it opens the list of all inputs, that can be made visible together for advanced settings tasks.
- A Firmware Update button allows to update the BT BOARD DMA firmware (not the amplifier firmware).

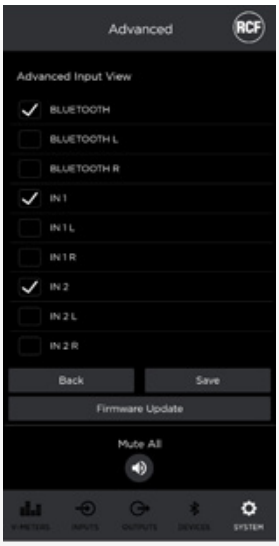

APPLICATION EXAMPLES

SMALL SHOP

Background music in a small area such as a beauty salon, small store, bookshop and similar.

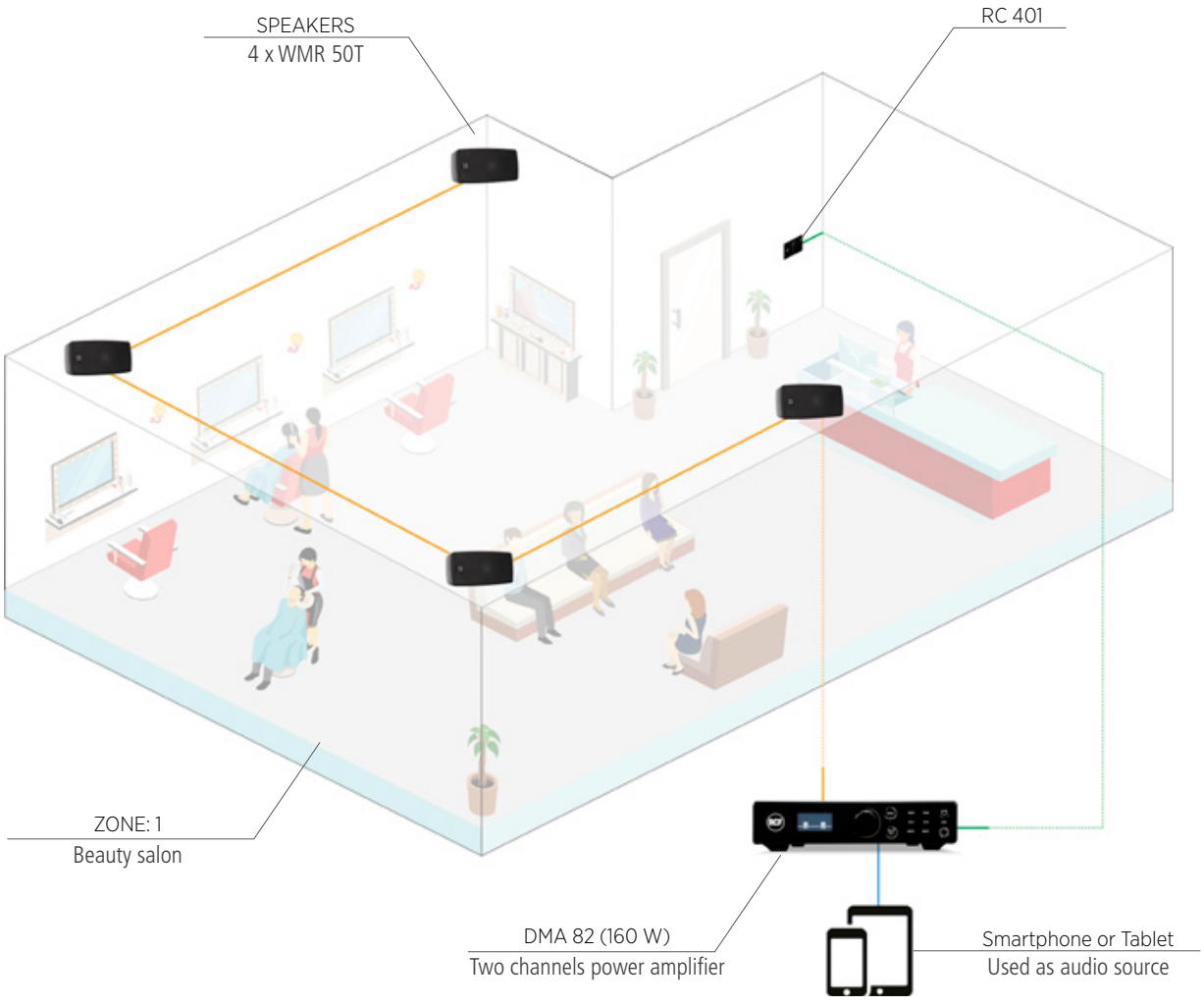

ZONES	AMPLIFIER	POWER	OUT LINES	LOUDSPEAKERS SOLUTIONS		ZONES	ACCESSORIES
				PREMIUM	4 x WMR 50T		
1	DMA 82	160 W	HI IMP.	or	4 x MR 40T	BEAUTY SALON	RC 401
				or	4 x MQ 50C		

Amplifier output — Audio input — Accessories

RCF provides examples of typical applications using various products as a general guideline, not intended as a reference for installers.

LARGE RETAIL SHOP

Background and Foreground music in a large retail shop. Separated women and men sales areas and fitting rooms, with different music programs.

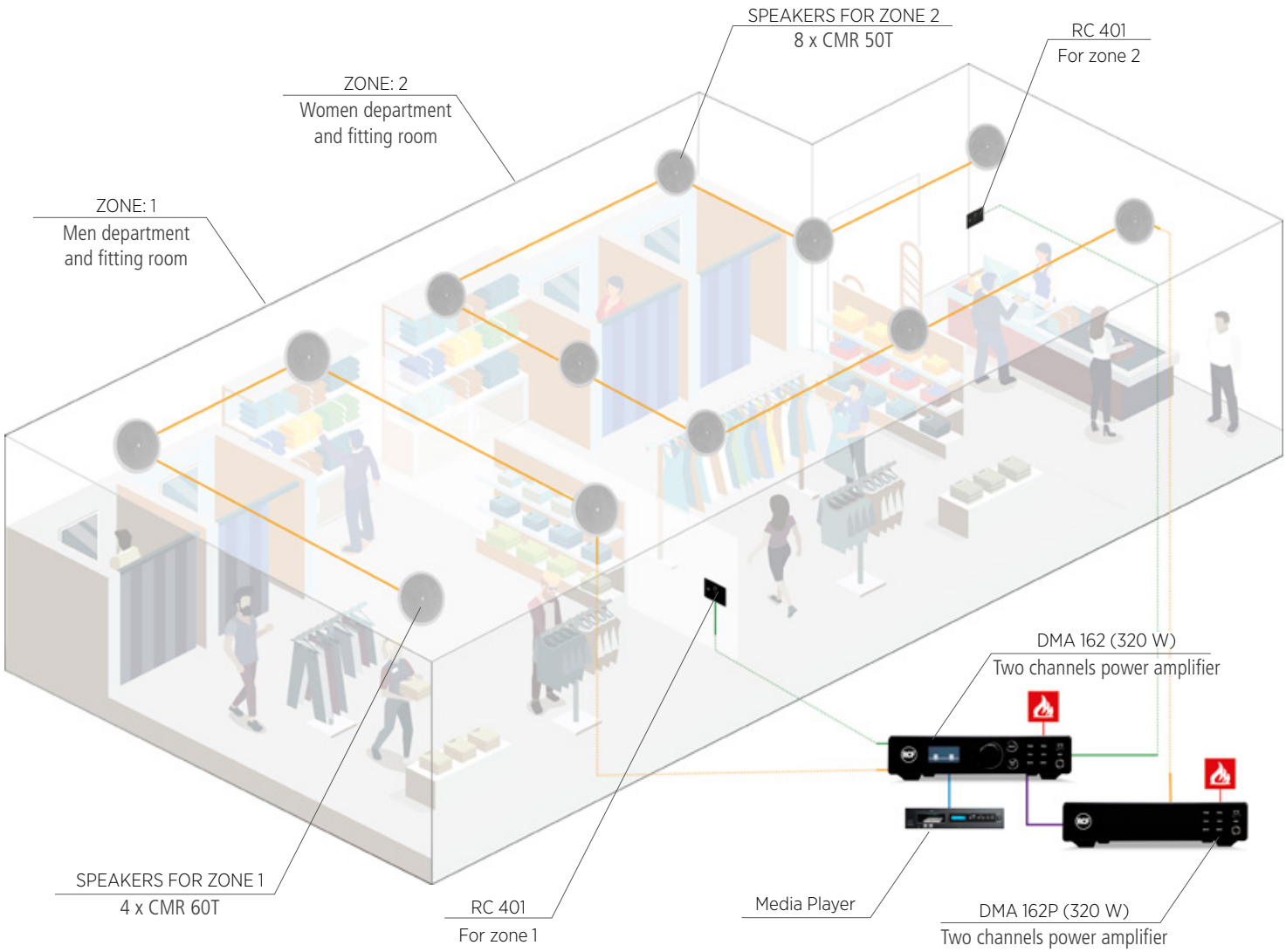

ZONES	AMPLIFIER	POWER	OUT LINES	LOUDSPEAKERS SOLUTIONS		ZONES	ACCESSORIES
2	DMA 162	320 W	HI IMP.	PREMIUM	4 x CMR 60T	MEN	RC 401
				or	4 x MQ 50C		
	DMA 162P	320 W	HI IMP.	PREMIUM	8 x CMR 50T	WOMEN	RC 401
				or	8 x PL 8X		

Amplifier output — Audio input — 4 channels audio bus — Mute from emergency system — Accessories

RCF provides examples of typical applications using various products as a general guideline, not intended as a reference for installers.

APPLICATION EXAMPLES

MEETING ROOM

Multimedia application in a meeting room or a corporate space.

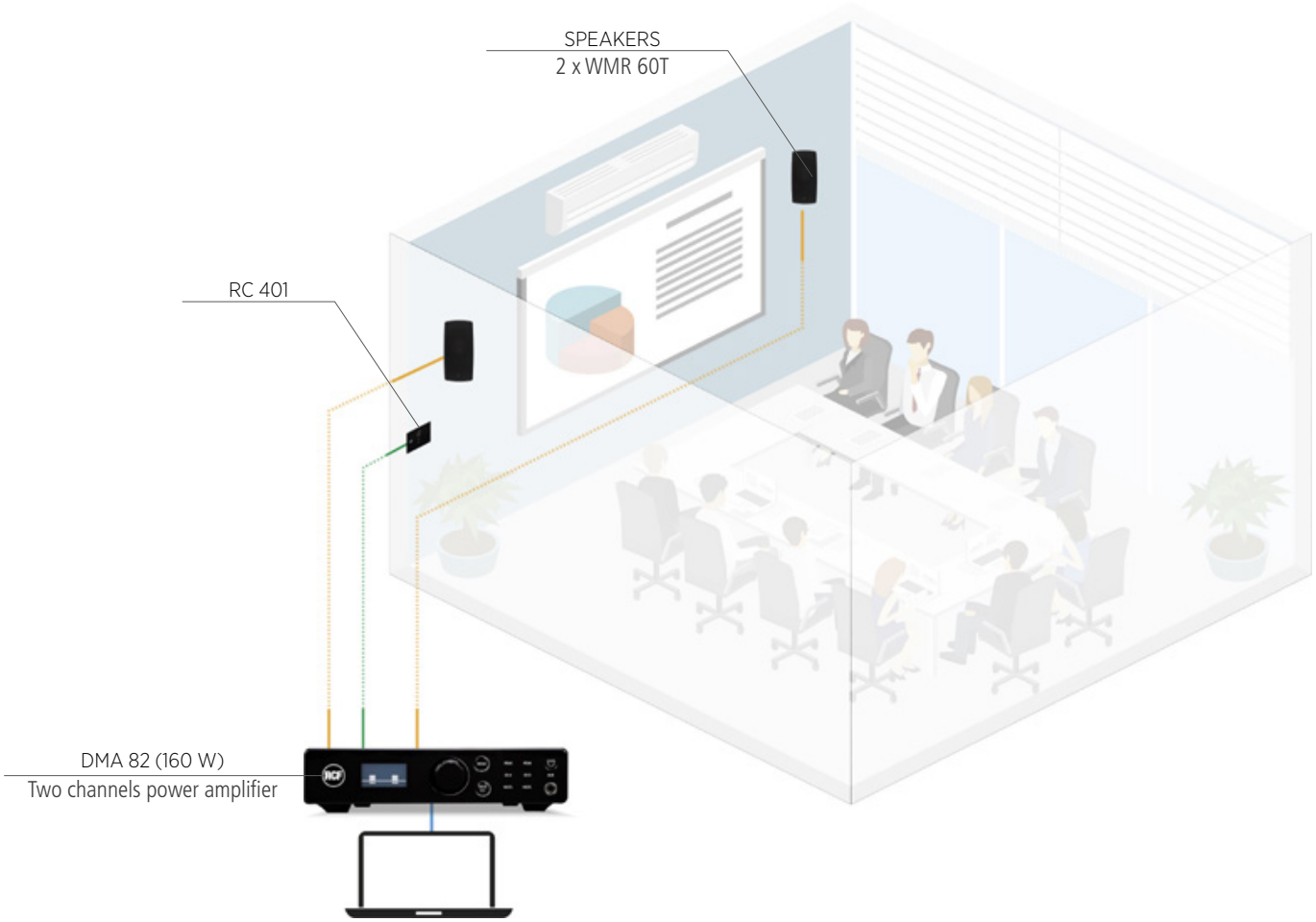

ZONES	AMPLIFIER	POWER	OUT LINES	LOUDSPEAKERS SOLUTIONS		ZONE	ACCESSORIES
1	DMA 82	2 x 80 W	LOW IMP.	**PREMIUM** or	**2 x WMR 60T** 2 x WMF 33EN	MEETING ROOM	RC 401

Amplifier output — Audio input — Accessories

RCF provides examples of typical applications using various products as a general guideline, not intended as a reference for installers.

BAR AND PUB

Sound reinforcement in a bar/pub with two rooms and two music programs.

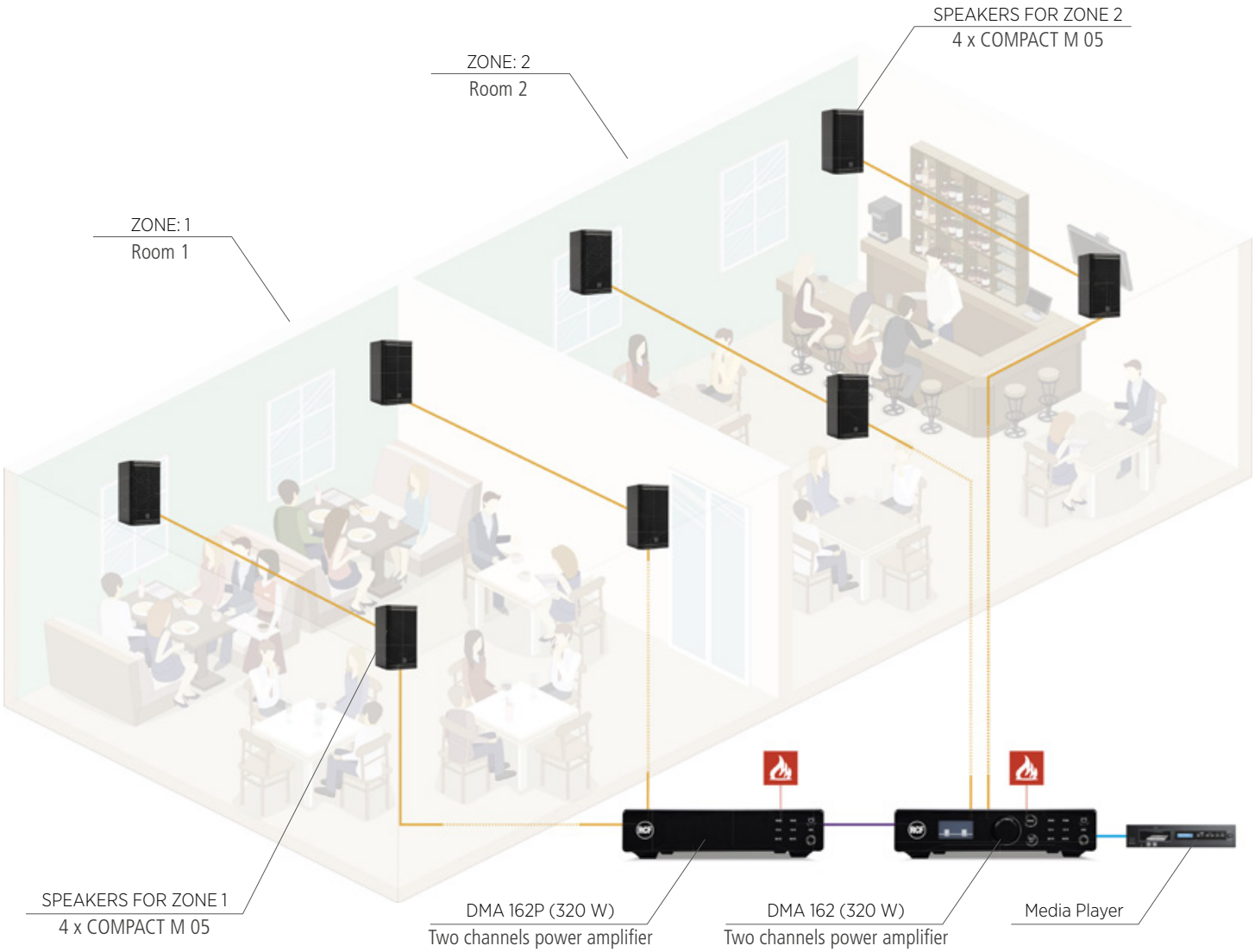

ZONES	AMPLIFIERS	POWER	OUT LINES	LOUDSPEAKERS	ZONES
2	DMA 162	2 x 160 W	LOW IMP.	4 x COMPACT M 05	ROOM 1
	DMA 162P	2 x 160 W		4 x COMPACT M 05	ROOM 2

Amplifier output — Audio input — 4 channels audio bus — Mute from emergency system

RCF provides examples of typical applications using various products as a general guideline, not intended as a reference for installers.

APPLICATION EXAMPLES

RESTAURANT

Background music in a restaurant with two or more dining areas.

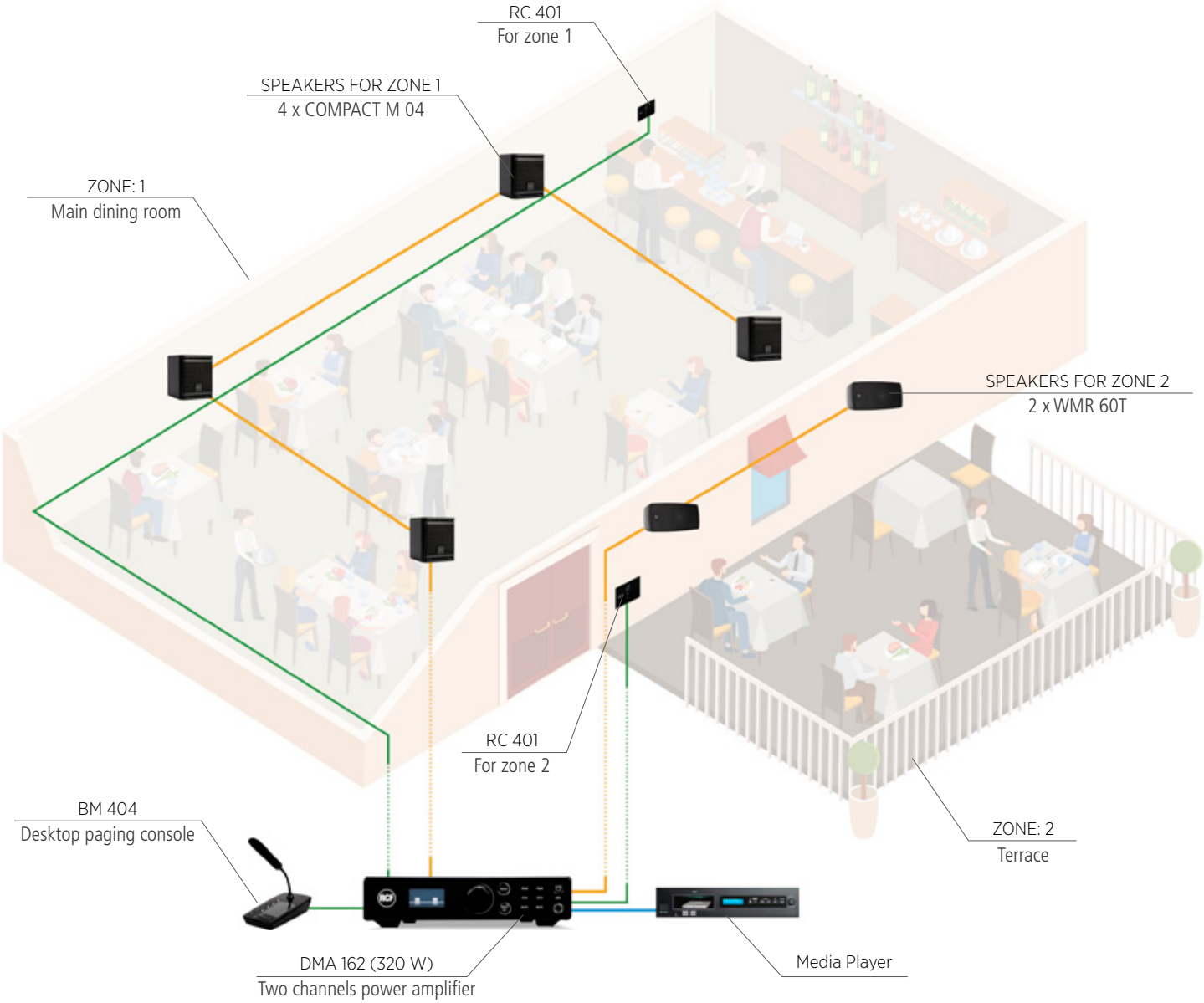

ZONES	AMPLIFIER	POWER	OUT LINES	LOUDSPEAKERS SOLUTIONS		ZONES	ACCESSORIES
2	DMA 162	2 x 160 W	LOW IMP.	**PREMIUM** or	**4 x COMPACT M 04** (optimed distribution) or 4 x MQ 50C	MAIN	2 X RC 401 1 x BM 404
				PREMIUM or	**2 x WMR 60T** or 2 x MR 50	TERRACE	

Amplifier output — Audio input — Accessories

RCF provides examples of typical applications using various products as a general guideline, not intended as a reference for installers.

MULTI-ROOM RISTO CLUB

Audio system for background and foreground music in a multi-room club.

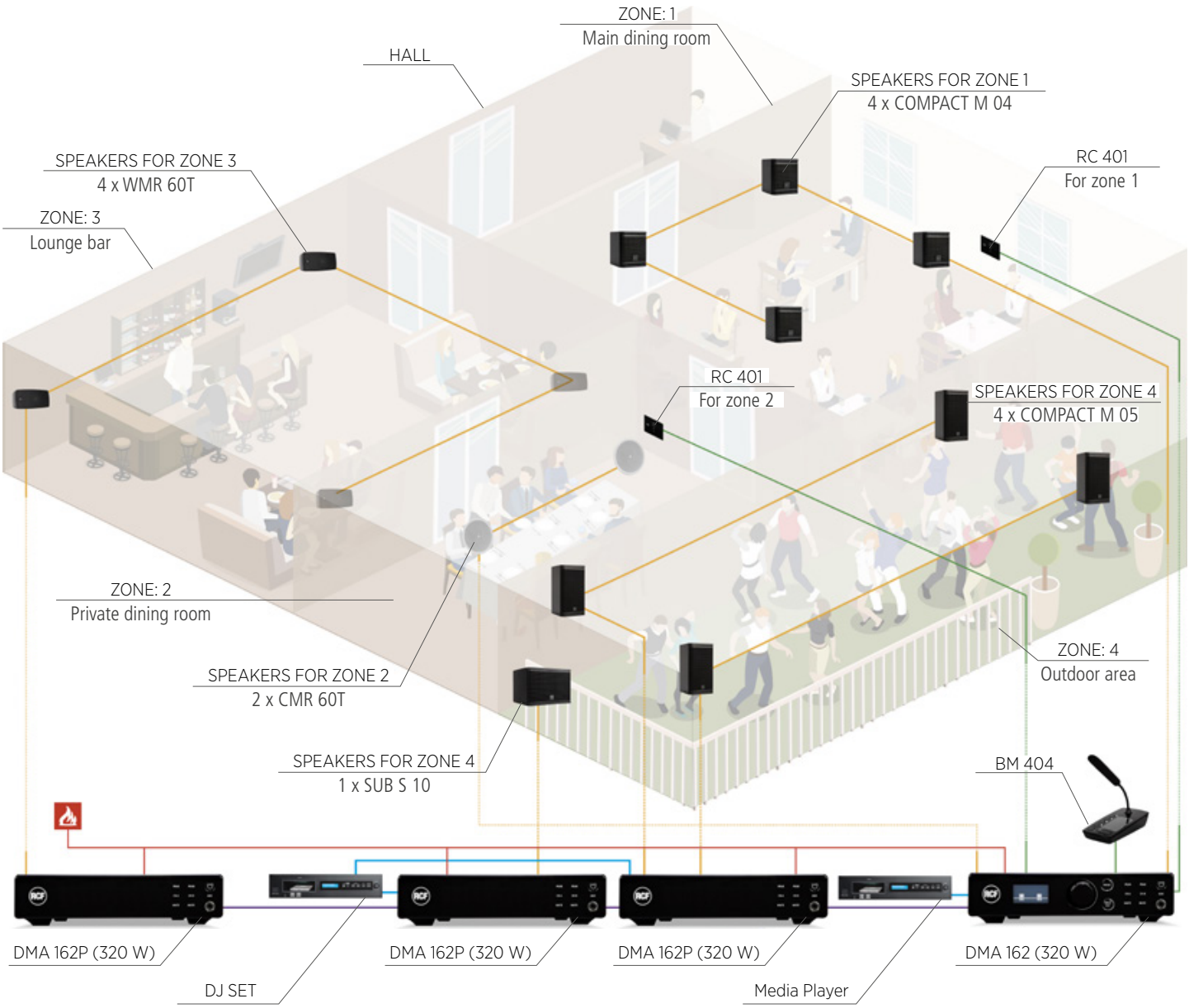

ZONES	AMPLIFIER	POWER	OUT LINES	LOUDSPEAKERS SOLUTIONS	ZONES	ACCESSORIES
4	DMA 162	2 x 160 W	LOW IMP.	4 x COMPACT M 04 (optimized distribution)	1 MAIN	RC 401
			LOW IMP.	2 x CMR 60T	2 PRIVATE	RC 401
	DMA 162P	320 W	HI IMP.	4 x WMR 60T	3 LOUNGE	
	DMA 162P	2 x 160 W	LOW IMP.	4 x COMPACT M 05	4 OUTDOOR	
	DMA 162P	320 W	LOW IMP.	1 x SUB S 10		

Amplifier output — Audio input — Accessories — 4 channels audio bus — Mute from emergency system

RCF provides examples of typical applications using various products as a general guideline, not intended as a reference for installers.

APPLICATION EXAMPLES

SUPERMARKET

Live announcements and background music in a supermarket.

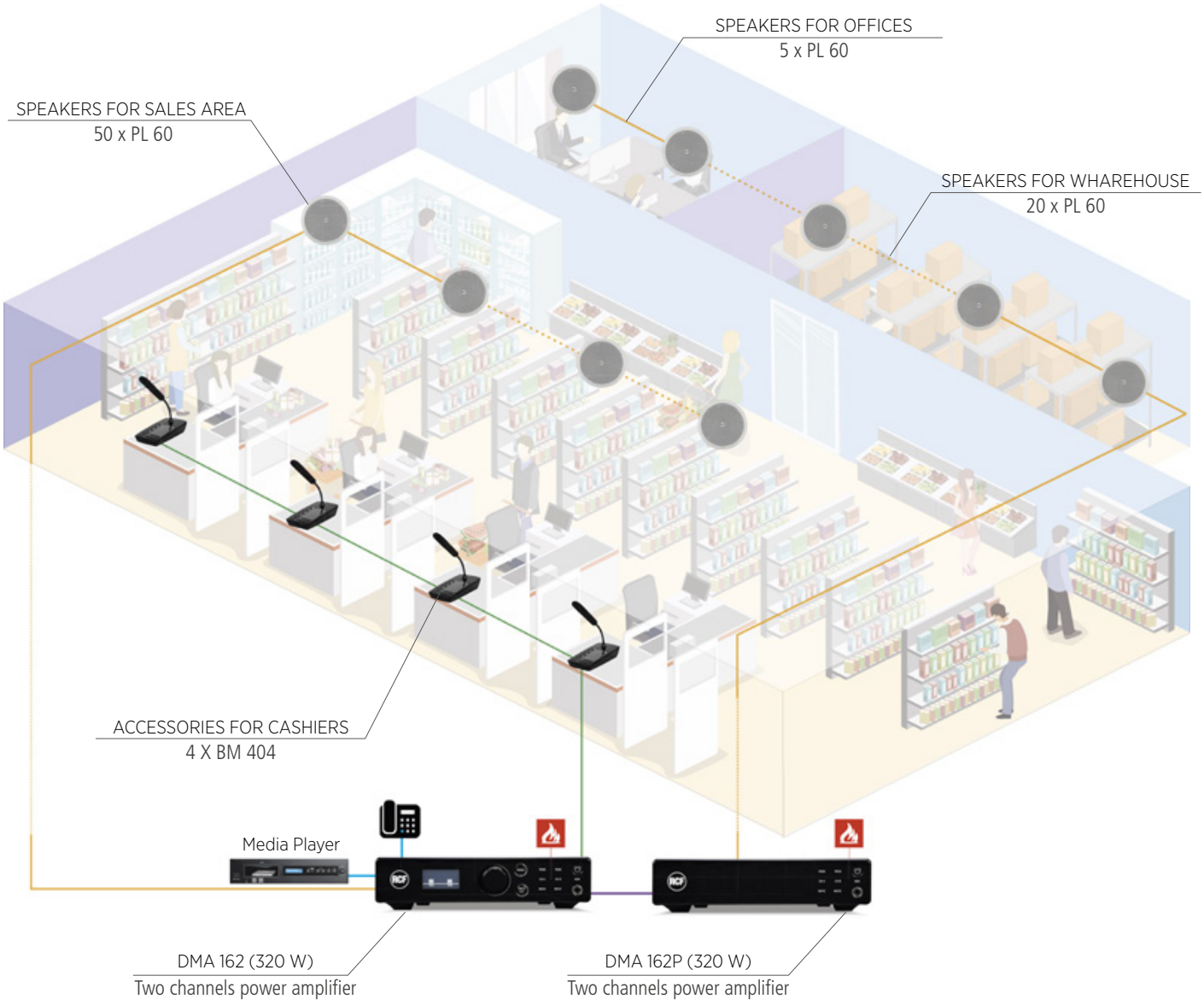

ZONES	AMPLIFIER	POWER	OUT LINES	LOUDSPEAKERS	ZONES	ACCESSORIES
1	DMA 162	320 W	HI IMP.	50 x PL 60	SALES	4 X BM 404
	DMA 162P	320 W	HI IMP.	25 x PL 60	OFFICES/ WHAREHOUSE	

Amplifier output — Audio input — Accessories — 4 channels audio bus — Mute from emergency system

RCF provides examples of typical applications using various products as a general guideline, not intended as a reference for installers.

FITNESS CENTER

Background music in a sport facility or a fitness center.

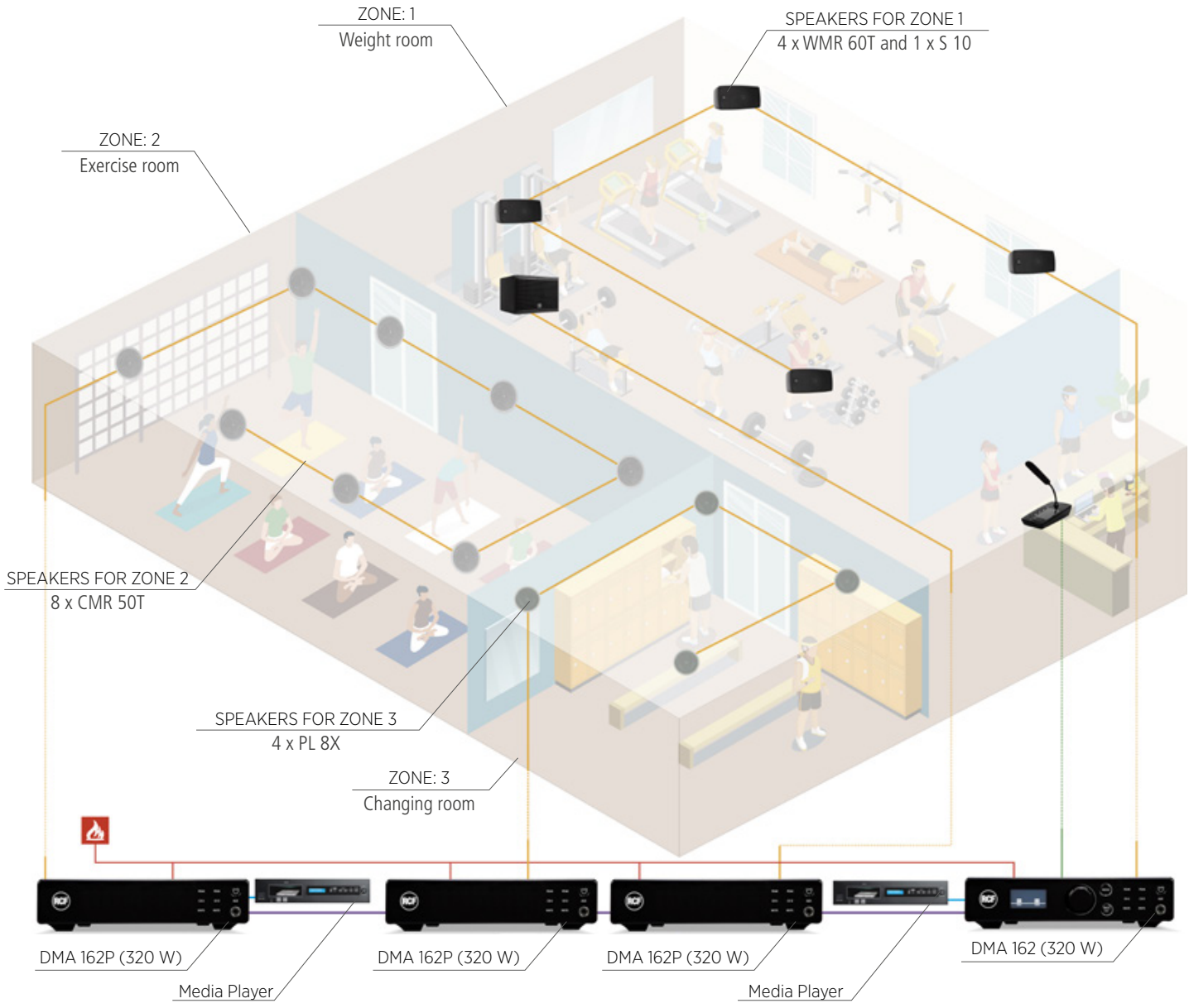

ZONES	AMPLIFIER	POWER	OUT LINES	LOUDSPEAKERS	ZONES	ACCESSORIES
3	DMA 162	320 W	HI IMP.	4 x WMR 60T	1 WEIGHT ROOM	BM 404
	DMA 162P	320 W	LOW IMP.	1 x S 10		
	DMA 162P	320 W	HI IMP.	8 x CMR 50T	2 EXERCISE ROOM	
	DMA 162P	320 W	HI IMP.	4 x PL 8X	3 CHANGING ROOM	

Amplifier output — Audio input — Accessories — 4 channels audio bus — Mute from emergency system

RCF provides examples of typical applications using various products as a general guideline, not intended as a reference for installers.

M06 COMPACT M

COMPACT M 06

TWO-WAY PASSIVE SPEAKER

COMPACT M 06 is a multipurpose two-way full-range speaker system, suitable for a wide range of applications. Its balanced sound is a big asset in near-field applications for the best intelligibility. The M 06 features high sensitivity, typical of professional audio cabinets thanks to the use of oversized magnets and a HI-FI sound quality, with smooth and wide frequency response, thanks to the wave-guided neodymium dome tweeter. The SPL level of low-distortion audio the M 06 can provide goes far beyond expectations of such a compact solution. The elegant and compact design with accurate finishing makes M 06 suitable for almost any environment, even with architectural constraints. Optional mounting accessories allow using M 06 on wall or ceiling installations.

- 100 W AES power handling
- 116 dB max SPL
- 60 ÷ 20000 Hz frequency range
- 120° x 80° constant directivity coverage angle
- 1 x 6" high power woofer
- 1 x 1" voice coil neodymium dome tweeter
- High quality plywood cabinet
- Steel front grille with clothing

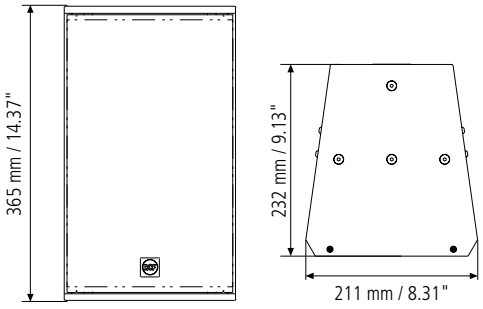

PRODUCT NAME		PART NUMBER
COMPACT M 06	Black - RAL 9005	**p.n. 13000582**
COMPACT M 06 W	White - RAL 9003	**p.n. 13000721**

ACOUSTICAL SPECIFICATIONS

Freq. Range (-10 dB):	60 Hz ÷ 20 kHz
Horiz. Coverage angle (-6 dB):	120°
Vertical coverage angle (-6 dB):	80°
Directivity factor Q:	7
System sensitivity:	90 dB, 1W @ 1m
Rated maximum SPL:	116 dB, @ 1m
System nominal impedance:	8 ohm
System input power rating RMS:	100 W
System input power rating peak:	400 W
Recommended amplifier:	200 W
HF protection:	Dynamic
Crossover:	2.2 kHz

TRANSDUCERS

Low frequency:	6" (152 mm) woofer, 1.5" (38 mm) v.c.
Nominal impedance:	8 ohm
Input power rating:	100 W AES, 200 W PEAK

TRANSDUCERS

Sensitivity:	90 dB, 1W @ 1m
High frequency:	Neo 1.3"(33 mm) throat, 1"(25 mm) v.c.
Nominal impedance:	8 ohm
Input power rating:	15 W AES, 30 W PEAK
Sensitivity:	92 dB, 1W @ 1m

PHYSICAL SPECIFICATIONS

Enclosure:	Trapezoidal (angle: 8°), made of MDF (12 mm)
Rigging inserts:	4 x M6, 2 x M8
Grille:	Steel with clothing
Input connectors:	4-pin EUROBLOCK
Dimensions (HxWxD):	14.37"x8.31"x9.13" | 365x211x232 mm
Weight:	12.13 lbs | 5.5 kg

ACCESSORIES

Specifications pag. 25

PNL IN-OUT SPEAKON COMPACT M		p.n. 12399062
SWM-BR COMPACT M	Black - RAL 9005	p.n. 13360449
SWM-BR COMPACT M W	White - RAL 9003	p.n. 13360468
H-BR 2X COMPACT M 06	Black - RAL 9005	p.n. 13360461
H-BR 2X COMPACT M 06 W	White - RAL 9003	p.n. 13360470

M05 COMPACT M

COMPACT M 05

TWO-WAY PASSIVE SPEAKER

COMPACT M 05 is a multipurpose two-way full-range speaker system, suitable for a wide range of applications. Its balanced sound is a big asset in near-field applications for the best intelligibility. M 05 features high sensitivity, typical of professional audio cabinets thanks to the use of oversized magnets and a HI-FI sound quality, with smooth and wide frequency response, thanks to the wave-guided neodymium dome tweeter. The SPL level of low-distortion audio the M 05 can provide goes far beyond expectations of such a compact solution. The elegant and compact design with accurate finishing makes M 05 suitable for almost any environment, even with architectural constraints. Optional mounting accessories allow the use of the M 05 on wall or ceiling installations

- 80 W RMS power handling
- 115 dB max SPL
- 70 ÷ 20000 Hz frequency range
- 120° x 80° constant directivity coverage angle
- 1 x 5″ high power woofer
- 1 x 1″ voice coil neodymium dome tweeter
- High quality plywood cabinet
- Steel front grille with clothing

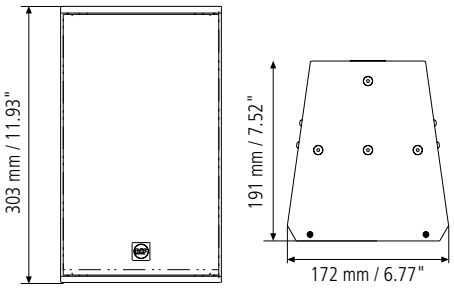

PRODUCT NAME		PART NUMBER
COMPACT M 05	Black - RAL 9005	**p.n. 13000581**
COMPACT M 05 W	White - RAL 9003	**p.n. 13000720**

ACOUSTICAL SPECIFICATIONS

Freq. Range (-10 dB):	70 Hz ÷ 20 kHz
Horiz. Coverage angle (-6 dB):	120°
Vertical coverage angle (-6 dB):	80°
Directivity factor Q:	7
System sensitivity:	89 dB, 1W @ 1m
Rated maximum SPL:	115 dB, @ 1m
System nominal impedance:	8 ohm
System input power rating RMS:	80 W
System input power rating peak:	320 W
Recommended amplifier:	160 W
Crossover:	2.2 kHz

TRANSDUCERS

Low frequency:	5″ (127 mm) woofer, 1.2″ (30 mm) v.c.
Nominal impedance:	8 ohm
Input power rating:	80 W AES, 160 W PEAK

TRANSDUCERS

Sensitivity:	89 dB, 1W @ 1m
High frequency:	Neo 1.3″(33 mm) throat, 1″(25 mm) v.c.
Nominal impedance:	8 ohm
Input power rating:	15 W AES, 30 W PEAK
Sensitivity:	92 dB, 1W @ 1m

PHYSICAL SPECIFICATIONS

Enclosure:	Trapezoidal (angle: 8°), made of MDF (12 mm)
Rigging inserts:	4 x M6, 2 x M8
Grille:	Steel with clothing
Input connectors:	4-pin EUROBLOCK
Dimensions (HxWxD):	11.93″x6.77″x7.52″ | 303x172x191 mm
Weight:	9.92 lbs | 4.5 kg

ACCESSORIES

Specifications pag. 25

PNL IN-OUT SPEAKON COMPACT M		p.n. 12399062
SWM-BR COMPACT M	Black - RAL 9005	p.n. 13360449
SWM-BR COMPACT M W	White - RAL 9003	p.n. 13360468
H-BR 2X COMPACT M 05	Black - RAL 9005	p.n. 13360460
H-BR 2X COMPACT M 05 W	White - RAL 9003	p.n. 13360469

COMPACT M 04

TWO-WAY PASSIVE SPEAKER

COMPACT M 04 is a multipurpose two-way full-range coaxial speaker system, suitable for a wide range of applications. Its balanced sound is a big asset in near-field applications for the best intelligibility. M 04 features high sensitivity, thanks to the use of oversized magnets, and a HI-FI sound quality, with smooth and wide frequency response. The SPL level of low-distortion audio the M 04 can provide goes far beyond expectations of such a compact solution. The elegant and compact design with accurate finishing makes M 04 suitable for almost any environment, even with architectural constraints. Included wall mount bracket allow the use of the M 04 on wall or ceiling installations.

- 60W RMS power handling
- 113 dB max SPL
- 90 ÷ 20000 Hz frequency range
- 120° x 120° constant directivity coverage angle
- 1 x 4" coax woofer
- 1 x 1" voice coil neodymium dome tweeter
- Wall mount bracket included
- High quality plywood cabinet
- Steel front grille with clothing

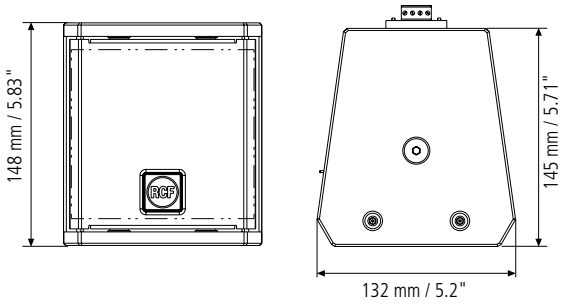

Wall mount bracket included

PRODUCT NAME		PART NUMBER
COMPACT M 04	Black - RAL 9005	**p.n. 13000623**
COMPACT M 04 W	White - RAL 9003	**p.n. 13000725**

ACOUSTICAL SPECIFICATIONS

Freq. Range (-10 dB):	90 Hz ÷ 20 kHz
Horiz. Coverage angle (-6 dB):	120°
Vertical coverage angle (-6 dB):	120°
Directivity factor Q:	6
System sensitivity:	89 dB, 1W @ 1m
Rated maximum SPL:	110 dB, @ 1m
System nominal impedance:	16 ohm
System input power rating RMS:	60 W
System input power rating peak:	240 W
Recommended amplifier:	120 W
Crossover:	1.8 kHz

TRANSDUCERS

Low frequency:	4" (100 mm) woofer, 1" (25 mm) v.c.
Nominal impedance:	16 ohm
Input power rating:	60 W AES, 120 W PEAK
Sensitivity:	88 dB, 1W @ 1m
High frequency:	1"neo (25 mm) throat, 1"(25 mm) v.c.
Nominal impedance:	16 ohm
Input power rating:	10 W AES, 20 W PEAK
Sensitivity:	91 dB, 1W @ 1m

PHYSICAL SPECIFICATIONS

Enclosure:	Plywood
Rigging inserts:	2 x M6, 2 x M8
Grille:	Steel with clothing
Input connectors:	4-pin EUROBLOCK
Dimensions (HxWxD):	5.83"x5.2"x5.71" | 148x132x145 mm
Weight:	2.3 kg | 5.07 lbs

M ACCESSORIES

H-BR 2X COMPACT M 06
H-BR 2X COMPACT M 06 W

Black - RAL 9005 p.n. 13360461

White - RAL 9003 p.n. 13360470

PAIR OF HORIZONTAL BRACKETS

- Pair of horizontal brackets for COMPACT M 06 speakers wall mounting

---

H-BR 2X COMPACT M 05
H-BR 2X COMPACT M 05 W

Black - RAL 9005 p.n. 13360460

White - RAL 9003 p.n. 13360469

PAIR OF HORIZONTAL BRACKETS

- Pair of horizontal brackets for COMPACT M 05 speakers wall mounting

---

SWM-BR COMPACT M
SWM-BR COMPACT M W

Black - RAL 9005 p.n. 13360449

Black - RAL 9005 p.n. 13360468

SWIVEL WALL MOUNT BRACKET FOR COMPACT M

Swivel bracket for COMPACT M 05, M 06 and M 08 speakers wall mounting. It allows both horizontal and vertical installation, with fixed tilt angles 0°, 15°, 30° and 45°

PANEL PNL IN-OUT SPEAKON

p.n. 12399062

SPEAKON IN-OUT CONNECTOR OPTIONAL PANEL FOR COMPACT M

PNL IN-OUT is an optional panel that allows to switch from EUROBLOCK to SpeakON input / output connectors. This can be done easily thanks to the single connector on the back

---

PREMIUM

WMR 60T

TWO-WAY WALL MOUNT MONITOR SPEAKER

WMR 60T is a multi-purpose two-way wallmounted speaker, suitable for a wide range of applications. Thanks to its elegant and discreet design and accurate details, WMR 60T pairs any building's aesthetic. The high-quality transducers guarantee a precise music reproduction of the entire frequency band and provide impressive sound pressure levels for such a compact enclosure. The installation is easy thanks to the dedicated connection board inside the (included) wall mount support, which allows the installer to set the desired tilt first, fix the speaker, and finally connect it without the need for any tooling.

- 80W RMS power handling
- 114 dB max SPL
- 70 ÷ 20000 Hz frequency range
- 140° x 100° constant directivity coverage angle
- 6.5″ high power woofer
- 1″ neodymium dome tweeter
- Self-extinguishing plastic cabinet and steel front grille
- Connection board integrated into the wall support
- 4 pole EUROBLOCK connector (audio input and parallel link output)
- 5 different power levels selectable

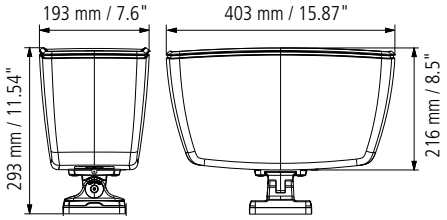

PRODUCT NAME		PART NUMBER
WMR 60T	Black	**p.n. 13100050**

ACOUSTICAL SPECIFICATIONS

Freq. Range (-10 dB):	70 Hz ÷ 20 kHz
Horiz. Coverage angle (-6 dB):	140°
Vertical coverage angle (-6 dB):	100°
System sensitivity:	89 dB, 1W @ 1m
Rated maximum SPL:	114 dB, @ 1m
System nominal impedance:	8 ohm
System input power rating RMS:	80 W
System input power rating peak:	320 W
Recommended amplifier:	160 W
Crossover:	2.5 kHz
Power selection (70/100 V):	80 - 40 - 20 - 10 - 5 W

TRANSDUCERS

Woofer:	6.5″ (165 mm) woofer, 1.2″ (30 mm) v.c.
Nominal impedance:	8 ohm

TRANSDUCERS

Input power rating:	80 W AES, 160 W PROGRAM POWER
Sensitivity:	89 dB, 1W @ 1m
High frequency:	neo 1" (25 mm) dome tweeter, 1″ (25 mm) v.c.
Nominal impedance:	8 ohm
Input power rating:	15 W AES, 30 W PROGRAM POWER
Sensitivity:	91 dB, 1W @ 1m

PHYSICAL SPECIFICATIONS

Enclosure:	ABS
Hardware:	Wall mount bracket
Color:	Black - RAL 9005
Grille:	Aluminium
Input/Output connectors:	EUROBLOCK
Height:	193 mm / 7.6"
Width:	403 mm / 15.87"
Depth:	293 mm / 11.54"
Weight:	6 kg / 13.23 lbs

WMR PREMIUM

WMR 50T

TWO-WAY WALL MOUNT MONITOR SPEAKER

WMR 50T is a multipurpose two-way wallmounted speaker, suitable for a wide range of applications. Thanks to its elegant and discreet design and accurate details, WMR 50T pairs any building's aesthetic. The high-quality transducers guarantee a precise music reproduction of the entire frequency band and provide impressive sound pressure levels for such a compact enclosure. The installation is easy thanks to the dedicated connection board inside the (included) wall mount support, which allows the installer to set the desired tilt first, fix the speaker, and finally quickly connect it without the need for any tooling.

- 40W RMS power handling
- 110 dB max SPL
- 80 ÷ 20000 Hz frequency range
- 140° x 100° constant directivity coverage angle
- 5″ high power woofer
- 1″ neodymium dome tweeter
- Self-extinguishing plastic cabinet and steel front grille
- Connection board integrated into the wall support
- 4 pole EUROBLOCK connector (audio input and parallel link output)
- 5 different power levels selectable

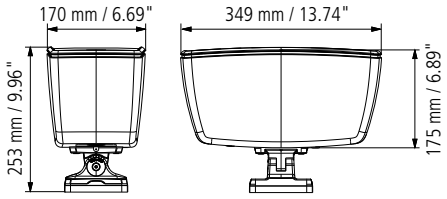

PRODUCT NAME		PART NUMBER
WMR 50T	Black	**p.n. 13100051**

ACOUSTICAL SPECIFICATIONS

Freq. Range (-10 dB):	80 Hz ÷ 20 kHz
Horiz. Coverage angle (-6 dB):	140°
Vertical coverage angle (-6 dB):	100°
System sensitivity:	88 dB, 1W @ 1m
Rated maximum SPL:	110 dB, @ 1m
System nominal impedance:	8 ohm
System input power rating RMS:	40 W
System input power rating peak:	160 W
Recommended amplifier:	80 W
Crossover:	2.5 kHz
Power selection (70/100 V):	40 - 20 - 10 - 5 - 2.5 W

TRANSDUCERS

Woofer:	5″ (125 mm) woofer, 1″ (25 mm) v.c.
Nominal impedance:	8 ohm

TRANSDUCERS

Input power rating:	40 W AES, 80 W PROGRAM POWER
Sensitivity:	88 dB, 1W @ 1m
High frequency:	neo 1" (25 mm) dome tweeter, 1″ (25 mm) v.c.
Nominal impedance:	8 ohm
Input power rating:	15 W AES, 30 W PROGRAM POWER
Sensitivity:	91 dB, 1W @ 1m

PHYSICAL SPECIFICATIONS

Enclosure:	ABS
Hardware:	Wall mount bracket
Color:	Black - RAL 9005
Grille:	Aluminium
Input/Output connectors:	EUROBLOCK
Height:	175 mm / 6.89"
Width:	349 mm / 13.74"
Depth:	253 mm / 9.96"
Weight:	4.6 kg / 10.14 lbs

CMR PREMIUM

CMR 60T

TWO-WAY CEILING MONITOR SPEAKER

CMR 60T is a multipurpose two-way in-ceiling speaker, suitable for a wide range of applications. Thanks to its elegant and discreet design and accurate details, CMR 60T pairs any building's aesthetic. The high-quality transducers, aligned in a coaxial configuration, guarantees a precise music reproduction of the entire frequency band and provides impressive sound pressure levels for such a compact enclosure. Installation is easy with three long travel clamps. The magnetic grille allows immediate access to the power selector on the front shell: the line transformer provides 80W full power on 70V and 100V constant voltage lines, and five different power levels.

- 80W RMS power handling
- 114 dB max SPL
- 70 ÷ 20000 Hz frequency range
- 130° constant directivity conical coverage angle
- 6.5" high power woofer
- 1" neodymium dome tweeter
- Self extinguishing plastic body and metal backcan
- Steel magnetic front grille
- 4 pole EUROBLOCK connector (audio input and parallel link output)
- 5 different power levels selectable

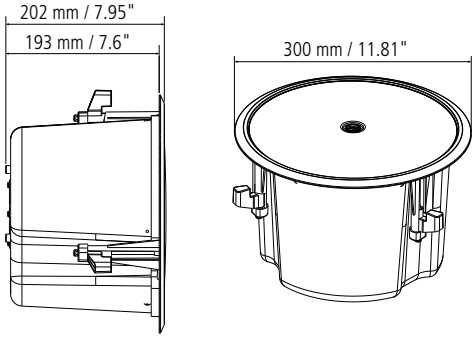

BLACK GRILLE
KIT 4X
CMR SPEAKERS
p.n. 13360492

PRODUCT NAME		PART NUMBER
CMR 60T W	White	**p.n. 13100045**

ACOUSTICAL SPECIFICATIONS

Freq. Range (-10 dB):	70 Hz ÷ 20 kHz
Coverage angle (-6 dB):	130°
System sensitivity:	89 dB, 1W @ 1m
Rated maximum SPL:	114 dB, @ 1m
System nominal impedance:	8 ohm
System input power rating RMS:	80 W
System input power rating peak:	320 W
Recommended amplifier:	160 W
Crossover:	2.5 kHz
Power selection (70/100 V):	80 - 40 - 20 - 10 - 5 W

TRANSDUCERS

Woofer:	6.5" (165 mm) woofer, 1.2" (30 mm) v.c.
Nominal impedance:	8 ohm
Input power rating:	80 W AES, 160 W PROGRAM POWER
Sensitivity:	89 dB, 1W @ 1m
High frequency:	neo 1" (25 mm) dome tweeter, 1" (25 mm) v.c.

TRANSDUCERS

Nominal impedance:	8 ohm
Input power rating:	15 W AES, 30 W PROGRAM POWER
Sensitivity:	91 dB, 1W @ 1m

PHYSICAL SPECIFICATIONS

Enclosure:	ABS
Hardware:	Steel backcan
Color:	White - RAL 9003
Grille:	Steel
Input/Output connectors:	EUROBLOCK
Depth:	202 mm / 7.95"
Recessed Depth:	193 mm / 7.6"
Diameter:	300 mm / 11.81"
Cut out diameter:	260 mm / 10.24"
Weight:	4.5 kg / 9.92 lbs

ACCESSORIES Specifications pag. 28

BLACK GRILLE KIT 4X CMR SPEAKERS	p.n. 13360492
MUD RING 4X CMR SPEAKERS	p.n. 13360490
TILE BRIDGE 4X CMR SPEAKERS	p.n. 13360489

CMR PREMIUM

CMR 50T

TWO-WAY CEILING MONITOR SPEAKER

CMR 50T is a multipurpose two-way in-ceiling speaker, suitable for a wide range of applications. Thanks to its elegant and discreet design and accurate details, CMR 50T pairs any building's aesthetic. The high-quality transducers, aligned in a coaxial configuration, guarantees a precise music reproduction of the entire frequency band and provides impressive sound pressure levels for such a compact enclosure. Installation is easy with three long travel clamps. The magnetic grille allows immediate access to the power selector on the front shell: the line transformer provides 40W full power on 70V and 100V constant voltage lines, and five different power levels.

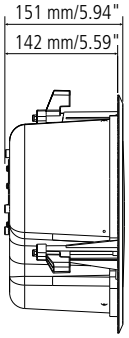

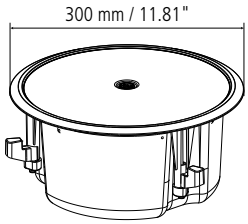

- 40W RMS power handling
- 110 dB max SPL
- 80 ÷ 20000 Hz frequency range
- 130° constant directivity conical coverage angle
- 5" high power woofer
- 1" neodymium dome tweeter
- Self-extinguishing plastic cabinet and metal backcan
- Steel magnetic front grille
- 4 pole EUROBLOCK connector (audio input and parallel link output)
- 5 different power levels selectable

BLACK GRILLE
KIT 4X
CMR SPEAKERS
p.n. 13360492

PRODUCT NAME		PART NUMBER
CMR 50T W	White	**p.n. 13100044**

ACOUSTICAL SPECIFICATIONS

Freq. Range (-10 dB):	80 Hz ÷ 20 kHz
Coverage angle (-6 dB):	130°
System sensitivity:	88 dB, 1W @ 1m
Rated maximum SPL:	110 dB, @ 1m
System nominal impedance:	8 ohm
System input power rating RMS:	40 W
System input power rating peak:	160 W
Recommended amplifier:	80 W
Crossover:	2.5 kHz
Power selection (70/100 V):	40 - 20 - 10 - 5 - 2.5 W

TRANSDUCERS

Woofer:	5" (125 mm) woofer, 1" (25 mm) v.c.
Nominal impedance:	8 ohm
Input power rating:	40 W AES, 80 W PROGRAM POWER
Sensitivity:	88 dB, 1W @ 1m
High frequency:	neo 1" (25 mm) dome tweeter, 1" (25 mm) v.c.

TRANSDUCERS

Nominal impedance:	8 ohm
Input power rating:	15 W AES, 30 W PROGRAM POWER
Sensitivity:	91 dB, 1W @ 1m

PHYSICAL SPECIFICATIONS

Enclosure:	ABS
Hardware:	Wall mount bracket
Color:	White - RAL 9003
Grille:	Steel
Input/Output connectors:	EUROBLOCK
Depth:	151 mm / 5.94"
Recessed Depth:	142 mm / 5.59"
Diameter:	300 mm / 11.81"
Cut out diameter:	260 mm / 10.24"
Weight:	4 kg / 8.82 lbs

ACCESSORIES Specifications pag. 28

BLACK GRILLE KIT 4X CMR SPEAKERS	p.n. 13360492
MUD RING 4X CMR SPEAKERS	p.n. 13360490
TILE BRIDGE 4X CMR SPEAKERS	p.n. 13360489

CMR ACCESSORIES

BLACK GRILLE KIT 4X CMR

p.n. 13360492

BLACK GRILLE KIT FOR CMR SPEAKERS

- Set of 4 black grilles for CMR 60T and CMR 50T ceiling speakers

MUD RING 4X CMR

p.n. 13360490

MUD RING FOR CMR SPEAKERS

- Mud ring accessory for CMR 60T and CMR 50T ceiling speakers

TILE BRIDGE 4X CMR

p.n. 13360489

TILE BRIDGE FOR CMR SPEAKERS

- Tile bridge accessory for CMR 60T and CMR 50T ceiling speakers

80

MONITOR

MQ 80P

TWO-WAY INDOOR OUTDOOR SPEAKER

High intelligibility, high efficiency and compact design make the RCF MQ 80P 2-way horn-loaded sound projector speaker system the ideal solution to get clear voice and music reproduction in mid-size environment. Suitable for PA systems and background/foreground music systems. It is suitable for both indoor and outdoor installations (IP 55). The woofer is a high-excursion, PP coated paper cone – rubber surround design mounted in a tuned enclosure (port can be sealed for full outdoor installation). The tweeter is a horn-loaded compression driver with phase plug, the only way to get real and crispy intelligible voice reproduction even in wide and noisy environments. Installation of the MQ 80P is quick thanks to the unique bracket with several fixing points and aiming facilities.

- 5" woofer with 1" compression driver
- Power/RMS: 120/60 W Bypass
- Tuning frequency: 100 Hz
- Power selectable (100 V): 30 – 10 – 10 – 5 W
- 94 dB sensitivity
- IP 55, suitable for outdoor use
- Suitable for cluster installation (2x, 3x) for a wide and uniform coverage

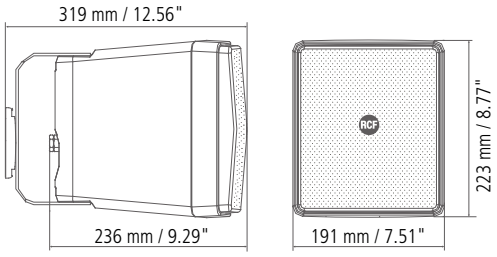

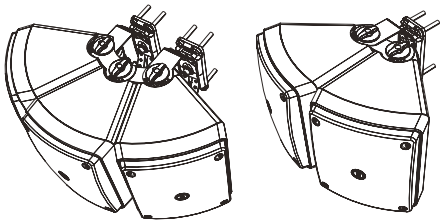

Thanks to its 90° X 60°constant directivity and to simple accessories it can be combined in clusters of 2 or more pieces to get wide and smooth coverage and to reduce the installation points.

PRODUCT NAME		PART NUMBER
MQ 80P B	Black	**p.n. 13000094**
MQ 80P W	White	**p.n. 13000096**

ACOUSTICAL SPECIFICATIONS

Freq. Range (-10 dB):	100 Hz ÷ 20 kHz
Horiz. Coverage angle (-6 dB):	90°
Vertical coverage angle (-6 dB):	60°
System sensitivity:	94 dB, 1W @ 1m
Rated maximum SPL:	114 dB, @ 1m
System nominal impedance:	8 ohm
System input power rating RMS:	60 W
System input power rating peak:	240 W
Recommended amplifier:	120 W

ACOUSTICAL SPECIFICATIONS

Crossover:	3 kHz
Power selection (100 V):	30 - 20 - 10 - 5 W

TRANSDUCERS

Low frequency:	5" (125 mm) woofer
High frequency:	1" (25 mm) compression driver

PHYSICAL SPECIFICATIONS

Enclosure:	Self-extinguishing plastic
IP protection grade:	IP 55
Color:	Black RAL 7021 | White RAL 9016
Grille:	Steel
Dimensions (HxWxD):	8.77"x7.51"x9.29" | 223x191x236 mm
Weight:	3.65 kg | 8.05 lbs

50

MONITOR

MR 50 | MR 50T

TWO-WAY PASSIVE SPEAKER

MR 50 and MR 50T are bass-reflex two-way speaker designed to deliver uncompromised audio performance and high reliability in fixed installations. Blend in with any environment and deliver deep bass, smooth midrange, and finely-detailed high-frequency response. Quality components and careful acoustic design make MR 50 and MR 50T the perfect speakers for listening in the most demanding applications.
MR 50T is equipped with 70/100 V line transformers.

- 60W RMS power handling
- 110 dB max SPL
- 60 ÷ 20000 Hz frequency range
- 110° x 100° coverage angles
- 1 x 5″ woofer
- 1 x 1″ neodymium dome tweeter
- Wall mount accessory included

MR 50T is equipped with
70/100 V line transformers.

MA 5
Bracket for mounting one speaker on the wall

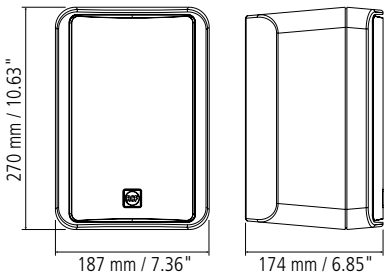

PRODUCT NAME			PART NUMBER
MR 50	Black	(p.n. refers to a couple of speakers)	**p.n. 13100038**
MR 50 W	White	(p.n. refers to a couple of speakers)	**p.n. 13100040**
MR 50T	Black	(p.n. refers to a couple of speakers)	**p.n. 13100039**
MR 50T W	White	(p.n. refers to a couple of speakers)	**p.n. 13100041**

ACOUSTICAL SPECIFICATIONS

Freq. Range (-10 dB):	60 Hz ÷ 20 kHz
Horiz. Coverage angle (-6 dB):	110°
Vertical coverage angle (-6 dB):	100°
System sensitivity:	87 dB, 1W @ 1m
Rated maximum SPL:	110 dB, @ 1m
System nominal impedance:	8 ohm
System input power rating RMS:	60 W
System input power rating peak:	240 W
Recommended amplifier:	120 W
HF protection:	Bulb Lamp
Crossover:	3 kHz
Power selection 1 (100 V):	(only MR 50T) 40 - 20 - 10 - 5 W

TRANSDUCERS

Low frequency:	5″ (125 mm) woofer, 1″ (25 mm) v.c.

TRANSDUCERS

Nominal impedance:	8 ohm
Input power rating:	60 W AES, 120 W PEAK
Sensitivity:	87 dB, 1W @ 1m
High frequency:	1" (25 mm) dome tweeter, 0.8″ (20 mm) v.c.
Nominal impedance:	8 ohm
Input power rating:	10 W AES, 20 W PEAK
Sensitivity:	93 dB, 1W @ 1m

PHYSICAL SPECIFICATIONS

Enclosure:	Self-extinguishing plastic
Color:	Black RAL 9005 | White RAL 9003
Grille:	Steel
Input connectors:	EUROBLOCK
Dimensions (HxWxD):	10.63"x7.36"x6.85" | 270x187x174 mm
Weight:	7.5 lb | 3.4 kg

ACCESSORIES

MA 5	Black	p.n. 13360369
MA 5 W	White	p.n. 13360370

40 MONITOR

MR 40 | MR 40T

TWO-WAY PASSIVE SPEAKER

MR 40 and MR 40T are bass-reflex two-way speaker designed to deliver uncompromised audio performance and high reliability in fixed installations. Blend in with any environment and deliver deep bass, smooth midrange, and finely-detailed high-frequency response. Quality components and careful acoustic design make MR 40 and MR 40T the perfect speakers for listening in the most demanding applications.
MR 40T is equipped with 70/100 V line transformers.

- 40W RMS power handling
- 108 dB max SPL
- 70 ÷ 20000 Hz frequency range
- 110° x 100° coverage angles
- 1 x 4" woofer
- 1 x 1" neodymium dome tweeter
- Wall mount accessory included

MR 40T is equipped with
70/100 V line transformers.

MA 5
Bracket for mounting one speaker on the wall

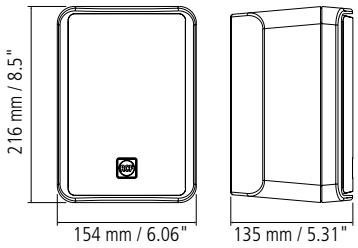

PRODUCT NAME			PART NUMBER
MR 40	Black	(p.n. refers to a couple of speakers)	**p.n. 13100034**
MR 40 W	White	(p.n. refers to a couple of speakers)	**p.n. 13100036**
MR 40T	Black	(p.n. refers to a couple of speakers)	**p.n. 13100035**
MR 40T W	White	(p.n. refers to a couple of speakers)	**p.n. 13100037**

ACOUSTICAL SPECIFICATIONS

Freq. Range (-10 dB):	70 Hz ÷ 20 kHz
Horiz. Coverage angle (-6 dB):	110°
Vertical coverage angle (-6 dB):	100°
System sensitivity:	86 dB, 1W @ 1m
Rated maximum SPL:	108 dB, @ 1m
System nominal impedance:	8 ohm
System input power rating RMS:	40 W
System input power rating peak:	160 W
Recommended amplifier:	80 W
HF protection:	Bulb Lamp
Crossover:	3 kHz
Power selection 1 (100 V):	(only MR 40T) 20 - 10 - 5 - 2.5 W

TRANSDUCERS

Low frequency:	4" (102 mm) woofer, 1" (25 mm) v.c.

TRANSDUCERS

Nominal impedance:	8 ohm
Input power rating:	40 W AES, 80 W PEAK
Sensitivity:	86 dB, 1W @ 1m
High frequency:	1" (25 mm) dome tweeter, 0.8" (20 mm) v.c.
Nominal impedance:	8 ohm
Input power rating:	10 W AES, 20 W PEAK
Sensitivity:	93 dB, 1W @ 1m

PHYSICAL SPECIFICATIONS

Enclosure:	Self-extinguishing plastic
Color:	Black RAL 9005 | White RAL 9003
Grille:	Steel
Input connectors:	EUROBLOCK
Dimensions (HxWxD):	8.5"x6.06"x5.31" | 216x154x135 mm
Weight:	3.74 lb | 1.7 kg

ACCESSORIES

MA 4	Black	p.n. 13360367
MA 4 W	White	p.n. 13360368

61

MONITOR

DM 61

TWO-WAY COMPACT SPEAKER

DM 61 is a compact two way speaker designed for constant voltage systems. The speaker provide natural, smooth sound reproduction ideal for use in business music systems and indoor/outdoor background music apllications. Connections to the loudspeaker line are made by using the two wire cable coming out from the loudspeaker rear side. The enclosure includes a protective perforated grille and an accessory for the wall mounting.

- 6" woofer with 1" dome tweeter
- Power selectable (100 V): 25 – 12.5 – 7.5 – 5 – 2.5 W
- 89 dB sensitivity
- Colour white RAL 9002
- Plastic body UL 94 V0, aluminium grille
- Protection grade IP 55

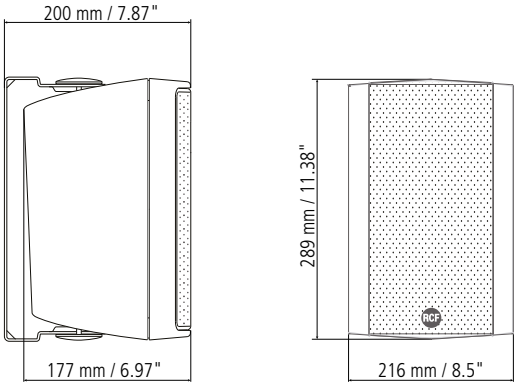

PRODUCT NAME	PART NUMBER
DM 61	**p.n. 13000050**

ACOUSTICAL SPECIFICATIONS

Freq. Range (-10 dB):	70 Hz ÷ 20 kHz
Horiz. Coverage angle (-6 dB):	120°
Vertical coverage angle (-6 dB):	140°
System sensitivity:	89 dB, 1W @ 1m
Rated maximum SPL:	106 dB, @ 1m
System nominal impedance:	8 ohm
System input power rating RMS:	25 W
System input power rating peak:	100 W
Recommended amplifier:	50 W
Crossover:	6 kHz
Power selection (100 V):	25 - 12.5 - 7.5 - 5 - 2.5 W

TRANSDUCERS

Low frequency:	6" (153 mm) woofer
High frequency:	1" (25 mm) compression driver

PHYSICAL SPECIFICATIONS

Enclosure:	Self-extinguishing plastic
IP protection grade:	IP 55
Hardware:	Aluminium U bracket
Color:	White - RAL 9002
Grille:	Aluminium
Dimensions (HxWxD):	11.38"x8.5"x6.97" | 289x216x177 mm
Weight:	3.98 kg / 8.77 lbs

41 MONITOR

DM 41

TWO-WAY COMPACT SPEAKER

DM 41 is a compact two way speaker designed for constant voltage systems. The speaker provide natural, smooth sound reproduction ideal for use in business music systems and indoor/outdoor background music applications. Connections to the loudspeaker line are made by using the two wire cable coming out from the loudspeaker rear side. The enclosure includes a protective perforated grille and an accessory for the wall mounting.

- 3.5" woofer with 1" dome tweeter
- Power selectable (100 V): 15 – 7.5 – 5 – 2.5 – 1.25 W
- 87 dB sensitivity
- Colour white RAL 9002 and black RAL 9005
- Plastic body UL 94 V0, steel aluminium
- Protection grade IP 55

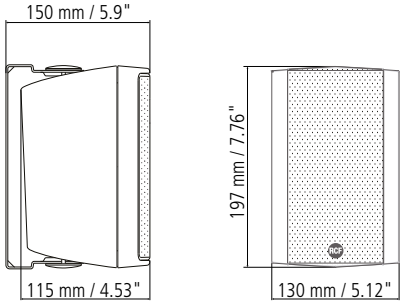

PRODUCT NAME		PART NUMBER
DM 41 B	Black	**p.n. 13000387**
DM 41	White	**p.n. 13000049**

ACOUSTICAL SPECIFICATIONS

Freq. Range (-10 dB):	100 Hz ÷ 20 kHz
Horiz. Coverage angle (-6 dB):	180°
Vertical coverage angle (-6 dB):	170°
System sensitivity:	87 dB, 1W @ 1m
Rated maximum SPL:	102 dB, @ 1m
System nominal impedance:	8 ohm
System input power rating RMS:	15 W
System input power rating peak:	60 W
Recommended amplifier:	30 W
Crossover:	2.5 kHz

ACOUSTICAL SPECIFICATIONS

Power selection (100 V):	15 - 7.5 - 5 - 2.5 - 1.25 W

TRANSDUCERS

Low frequency:	3.5" (89 mm) woofer
High frequency:	1" (25 mm) compression driver

PHYSICAL SPECIFICATIONS

Enclosure:	Self-extinguishing plastic
IP protection grade:	IP 55
Hardware:	Aluminium U bracket
Color:	Black RAL 9005 | White RAL 9002
Grille:	Aluminium
Dimensions (HxWxD):	7.76"x5.12"x4.53" | 197x130x115 mm
Weight:	1.7 kg / 3.75 lbs

WMF

MONITOR

WMF 33EN

TWO-WAY WALL MOUNT SPEAKER

WMF 33EN is a two-way wall mount speaker designed for both horizontal and vertical installation. It is especially suitable for broadcasting background music into commercial spaces, but also alarm messages thanks to the highly intelligible voice reproduction and the EN 54-24 certification. It features a plastic cabinet with steel magnetic grille and is extremely easy to install thanks to its smart support system. The terminal connection blocks, for input and output flameproof cables, are made of ceramic material. A thermal fuse protects the integrity of the line in case of heat affecting the speaker.

- 2 x 3″ full-range transducers with 1″ dome tweeter
- Power selectable (70 V / 100 V): 40 – 20 – 10 – 5 – 2.5 W
- 88 dB sensitivity
- Colour black RAL 9005
- Flameproof ABS body, steel grille
- In/out ceramic terminal block
- Thermal fuse protection
- Connections integrated in the wall support

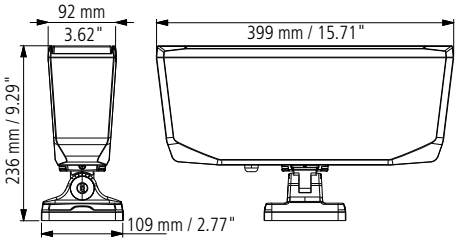

PRODUCT NAME	PART NUMBER
WMF 33EN	**p.n. 13100046**

CERTIFICATION

EN 54-24	**CPR: 0068-CPR-057/2019**	CE

ACOUSTICAL SPECIFICATIONS

Freq. Range (-10 dB):	80 Hz ÷ 22 kHz
Horiz. Coverage angle (-6 dB):	100°
Vertical coverage angle (-6 dB):	160°
System sensitivity:	88 dB, 1W @ 1m
Rated maximum SPL:	105 dB, @ 1m
System nominal impedance:	8 ohm
System input power rating RMS:	40 W
System input power rating peak:	160 W
Recommended amplifier:	80 W
Protections:	Thermal fuse - PTC
Crossover:	2.5 kHz
Power selection (100 V):	40 - 20 - 10 - 5 - 2.5 W

TRANSDUCERS

Low frequency:	2 x 3" (76 mm) woofer, 1" (25 mm) v.c.
Nominal impedance:	16 ohm
Input power rating:	20 W AES, 40 W PEAK
Sensitivity:	85 dB, 1W @ 1m
High frequency:	1" (25 mm) dome tweeter, 1" (25 mm) v.c. neo
Nominal impedance:	8 ohm
Input power rating:	15 W AES, 30 W PEAK
Sensitivity:	90 dB, 1W @ 1m

PHYSICAL SPECIFICATIONS

Enclosure:	Self-extinguishing plastic
IP protection grade:	IP 55
Hardware:	Wall mount bracket
Color:	Black - RAL 9005
Grille:	Steel
Dimensions (HxWxD):	15.71"x3.62"x9.29" | 399x92x236 mm
Weight:	5 kg / 11.02 lbs

MF
CEILING

MF 33EN

TWO-WAY CEILING SPEAKER

MF 33EN is a two-way ceiling speaker designed for recess installation into ceilings or panels. It is especially suitable for broadcasting background music into commercial spaces, but also alarm messages thanks to the highly intelligible voice reproduction and the EN 54-24 certification. It features a plastic cabinet with steel magnetic grille and is extremely easy to install. The terminal connection blocks, for input and output flameproof cables, are made of ceramic material. A thermal fuse protects the integrity of the line in case of heat affecting the speaker.

- 2 x 3" fullrange transducers with 1" dome tweeter
- Power selectable (70 V / 100 V): 40 – 20 – 10 – 5 – 2.5 W
- 88 dB sensitivity
- Colour black RAL 9005
- Flameproof ABS body, steel grilled
- In/out ceramic terminal block
- Thermal fuse protection

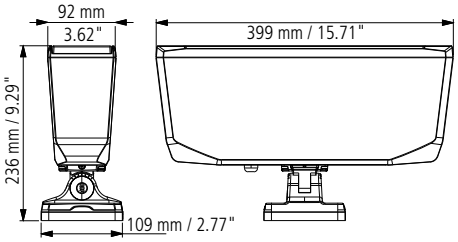

PRODUCT NAME		PART NUMBER
MF 33EN		**p.n. 13100043**

CERTIFICATION

EN 54-24	**CPR: 0068-CPR-057/2019**	CE

ACOUSTICAL SPECIFICATIONS

Freq. Range (-10 dB):	80 Hz ÷ 22 kHz
Horiz. Coverage angle (-6 dB):	100°
Vertical coverage angle (-6 dB):	160°
System sensitivity:	88 dB, 1W @ 1m
Rated maximum SPL:	105 dB, @ 1m
System nominal impedance:	8 ohm
System input power rating RMS:	40 W
System input power rating peak:	160 W
Recommended amplifier:	80 W
Protections:	Thermal fuse - PTC
Crossover:	2.5 kHz
Power selection (100 V):	40 - 20 - 10 - 5 - 2.5 W

TRANSDUCERS

Low frequency:	2 x 3" (76 mm) woofer, 1" (25 mm) v.c.
Nominal impedance:	16 ohm
Input power rating:	20 W AES, 40 W PEAK
Sensitivity:	85 dB, 1W @ 1m
High frequency:	1" (25 mm) dome tweeter, 1" (25 mm) v.c. neo
Nominal impedance:	8 ohm
Input power rating:	15 W AES, 30 W PEAK
Sensitivity:	90 dB, 1W @ 1m

PHYSICAL SPECIFICATIONS

Enclosure:	Self-extinguishing plastic
IP protection grade:	IP 55
Hardware:	Ceiling mount brackets
Color:	Black - RAL 9005
Grille:	Steel
Dimensions (HxWxD):	20.31"x3.7"x7.13" | 516x94x181 mm
Weight:	3.4 kg / 7.5 lbs

8X CEILING

PL 8X

COAXIAL CEILING SPEAKER

PL 50 is a flush-mount ceiling 6" (dual-cone) loudspeaker. It has an internal transformer that allows direct connection to 100 V constant voltage lines. The transformer has 2 inputs for power tapping: 6 – 3 W. The false-ceiling installation is made through its 2 spring clamps without using tools and other additional attachment components.

- Woofer da 6" con tweeter da 1"
- Power selectable (70 V / 100 V): 20 – 10 – 5 – 2.5 W
- 93 dB sensitivity
- Colour white RAL 9003 and black RAL 9005
- Plastic frame UL 94 V0, aluminium grille

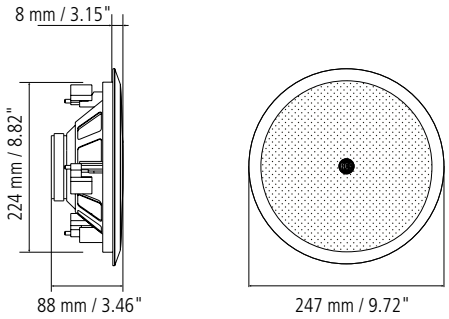

PRODUCT NAME		PART NUMBER
PL 8X B	Black	**p.n. 13100088**
PL 8X	White	**p.n. 13133043**

ACOUSTICAL SPECIFICATIONS

Freq. Range (-10 dB):	60 Hz ÷ 20 kHz
Coverage angle (-6 dB):	80°
System sensitivity:	93 dB, 1W @ 1m
Rated maximum SPL:	109 dB, @ 1m
System input power rating RMS:	20 W
System input power rating peak:	80 W
Recommended amplifier:	40 W
Power selection (100 V):	20 - 10 - 5 - 2.5 W

TRANSDUCERS

Low frequency:	8" (203 mm) fullrange
High frequency:	1" (25 mm) dome tweeter

PHYSICAL SPECIFICATIONS

Enclosure:	Plastic
IP protection grade:	IP 44
Hardware:	Plastic Material
Color:	White - RAL 9003, Black - RAL 9005
Grille:	Aluminium
Depth:	88 mm / 3.46"
Recessed depth:	80 mm / 3.15 "
Diameter:	247 mm / 9.72"
Cut out diameter:	224 mm / 8.82"
Weight:	1.23 kg / 2.71 lbs

6X CEILING

PL 6X

COAXIAL CEILING SPEAKER

The PL6X is a ceiling speakers featuring elegant and innovative design that can be flush-mounted in false ceilings or panels. Incorporating a 160 mm (6") loudspeaker. Both have a coaxial 25 mm (1") tweeter placed on a bridge support. The speakers are equipped with a line transformer that enables direct connection to constant voltage systems at 70 V or 100 V. The multiple sockets on the transformer make it possible to select the output power from among several values. Installation is quick and easy thanks to a special three-hook system that avoids the need for using screws and pallet or other attachment elements.

- 6" woofer with 1" dome tweeter
- Power selectable (70 V / 100 V): 12 – 6 – 3 – 1.5 W
- 92 dB sensitivity
- Colour white RAL 9003 and black RAL 9005
- Plastic frame UL 94 V0, aluminium grille

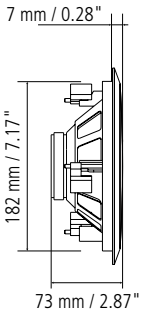

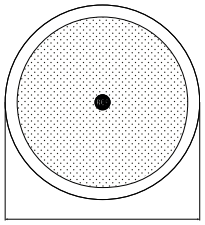

PRODUCT NAME		PART NUMBER
PL 6X B	Black	**p.n. 13100087**
PL 6X	White	**p.n. 13133042**

ACOUSTICAL SPECIFICATIONS

Freq. Range (-10 dB):	70 Hz ÷ 20 kHz
Coverage angle (-6 dB):	100°
System sensitivity:	92 dB, 1W @ 1m
Rated maximum SPL:	106 dB, @ 1m
System input power rating RMS:	12 W
System input power rating peak:	48 W
Recommended amplifier:	24 W
Power selection (100 V):	12 - 6 - 3 - 1.5 W

TRANSDUCERS

Low frequency:	6" (153 mm) fullrange
High frequency:	1" (25 mm) dome tweeter

PHYSICAL SPECIFICATIONS

Enclosure:	Plastic
IP protection grade:	IP 44
Hardware:	Plastic Material
Color:	White - RAL 9003, Black - RAL 9005
Grille:	Aluminium
Depth:	73 mm / 2.87"
Recessed depth:	66 mm / 2.6"
Diameter:	204 mm / 8.03"
Cut out diameter:	182 mm / 7.17"
Weight:	0.78 kg / 1.72 lbs

50

CEILING

MQ 50C

TWO-WAY CEILING SPEAKER

Compact design, light weight and limited depth makes the MQ 50C a 2-way ceiling speakers ideal for use in any background and foreground music system where a good sound is required. The woofer is a high-excursion, PP coated paper cone with rubber surround design mounted in a tuned enclosure. The fabric dome tweeter is loaded on a constant Q wave guide to provide natural and smooth sound reproduction on a wide dispersion angle. Installation of MQ 50C is fast and efficient thanks to the built-in rotating hooks. No additional brackets or rings or other supports are required: thanks to its lightweight construction the speaker can be mounted as a conventional ceiling speakers. Connections are made on four poles Euroblock connector. Power value can be selected with a rotary switch, accessible behind the grill.

- 5″ woofer with 1″ dome tweeter
- Power selectable (100 V): 30 – 20 – 10 – 5 W
- 91 dB sensitivity
- Colour white RAL 9016 and black RAL 9005
- Platic frame, alluminium back can and steel grille
- In/out euroblock connectors

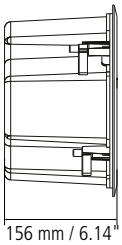

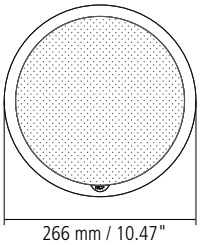

PRODUCT NAME		PART NUMBER
MQ 50C B	Black	**p.n. 13100089**
MQ 50C W	White	**p.n. 13000081**

ACOUSTICAL SPECIFICATIONS

Freq. Range (-10 dB):	70 Hz ÷ 20 kHz
Coverage angle (-6 dB):	120°
System sensitivity:	91 dB, 1W @ 1m
Rated maximum SPL:	112 dB, @ 1m
System input power rating RMS:	60 W
System input power rating peak:	240 W
Recommended amplifier:	120 W
Power selection (100 V):	30 - 20 - 10 - 5 W

TRANSDUCERS

Low frequency:	5″ (125 mm) woofer neo
High frequency:	1" (25 mm) dome tweeter neo

PHYSICAL SPECIFICATIONS

Enclosure:	Plastic
Hardware:	Plastic Material
Color:	Black RAL 9005 - White RAL 9016
Grille:	Steel
Depth:	156 mm / 6.14"
Diameter:	266 mm / 10.47"
Weight:	2.1 kg / 4.63 lbs

60

CEILING

PL 60

HIGH EFFICENCY CEILING SPEAKER

The PL60 is a ceiling speaker with an elegant design, intended for recess installation in false ceilings or panels. It is ideal for the reproduction of announcements and background music and features a multiplesocket line transformer for use with constant voltage systems.

- 6" fullrange transducer
- Power selectable (100 V): 6 – 3 W
- 91 dB sensitivity
- Colour white RAL 9003
- Plastic frame, steel grille

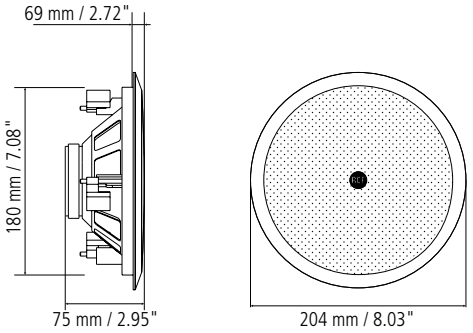

PRODUCT NAME	PART NUMBER
PL 60	**p.n. 13110214**

ACOUSTICAL SPECIFICATIONS

Freq. Range (-10 dB):	90 Hz ÷ 20 kHz
Coverage angle (-6 dB):	90°
System sensitivity:	91 dB, 1W @ 1m
Rated maximum SPL:	107 dB, @ 1m
System nominal impedance:	8 ohm
System input power rating RMS:	6 W
System input power rating peak:	24 W
Recommended amplifier:	12 W
Power selection (100 V):	6 - 3 W

TRANSDUCERS

Low frequency:	6" (153 mm) fullrange

PHYSICAL SPECIFICATIONS

Enclosure:	Plastic
Hardware:	Plastic Material
Color:	White - RAL 9003
Grille:	Steel
Depth:	75 mm / 2.95"
Recessed depth:	69 mm / 2.72"
Diameter:	204 mm / 8.03"
Weight:	0.34 kg / 0.75 lbs

50

CEILING

PL 50

CEILING SPEAKER

PL 50 is a flush-mount ceiling 6" (dual-cone) loudspeaker. It has an internal transformer that allows direct connection to 100 V constant voltage lines. The transformer has 2 inputs for power tapping: 6 – 3 W. The false-ceiling installation is made through its 2 spring clamps without using tools and other additional attachment components.

- 6" fullrange transducer
- Power selectable (100 V): 6 – 3 W
- 90 dB sensitivity
- Colour white RAL 9003
- Plastic frame and grille

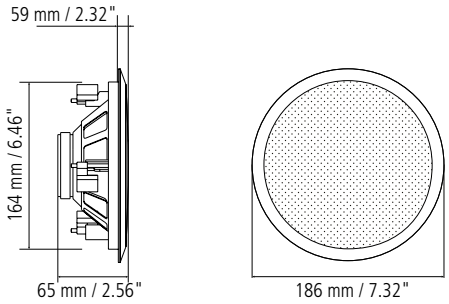

PRODUCT NAME	PART NUMBER
PL 50	**p.n. 13133060**

ACOUSTICAL SPECIFICATIONS

Freq. Range (-10 dB):	100 Hz ÷ 20 kHz
Coverage angle (-6 dB):	150°
System sensitivity:	90 dB, 1W @ 1m
Rated maximum SPL:	98 dB, @ 1m
System input power rating RMS:	6 W
System input power rating peak:	24 W
Recommended amplifier:	12 W
Power selection (100 V):	6 - 3 W

TRANSDUCERS

Low frequency:	6" (153 mm) fullrange

PHYSICAL SPECIFICATIONS

Enclosure:	Plastic
Hardware:	Metal
Color:	White - RAL 9003
Grille:	Plastic
Depth:	65 mm / 2.56"
Recessed depth:	59 mm / 2.32"
Diameter:	186 mm / 7.32"
Weight:	0.5 kg / 1.1 lbs

40 CEILING

PL 40

CEILING SPEAKER

PL 40 is a ceiling speakers featuring elegant and innovative design that can be flushmounted in false ceilings or panels. Incorporating a 3.5" fullrange transducer, PL 40 is equipped with a line transformer that enables direct connection to constant voltage systems at 70 V or 100 V. The multiple sockets on the transformer make possible to select the output power from among several values. Installation is quick and easy thanks to a special three-hook system that avoids the need for using screws and pallet or other attachment elements.

- 3.5" fullrange transducer
- Power selectable (100 V): 8 – 6 – 4 – 2 W
- 88 dB sensitivity
- Colour white RAL 9003
- Plastic frame UL 94 V0, aluminium grille

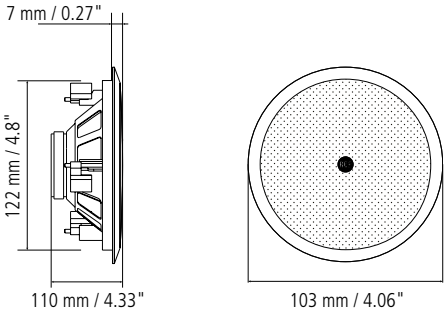

PRODUCT NAME	PART NUMBER
PL 40	**p.n. 13133045**

ACOUSTICAL SPECIFICATIONS

Freq. Range (-10 dB):	90 Hz ÷ 20 kHz
Coverage angle (-6 dB):	120°
System sensitivity:	88 dB, 1W @ 1m
Rated maximum SPL:	100 dB, @ 1m
System input power rating RMS:	8 W
System input power rating peak:	32 W
Recommended amplifier:	16 W
Power selection (100 V):	8 - 6 - 4 - 2 W

TRANSDUCERS

Low frequency:	3.5" (89 mm) fullrange

PHYSICAL SPECIFICATIONS

Enclosure:	Plastic
IP protection grade:	IP 44
Hardware:	Plastic Material
Color:	White - RAL 9003
Grille:	Aluminium
Depth:	110 mm / 4.33"
Recessed depth:	103 mm / 4.06"
Diameter:	130 mm / 5.12"
Cut out diameter:	122 mm / 4.8"
Weight:	0.38 kg / 0.84 lbs

VSA

COLUMNS

VSA II SERIES

DIGITALLY STEERABLE COLUMN SPEAKER

The VSA II system allows the audio signal to be addressed exactly to the listening area, avoiding the radiation of the acoustic energy to ceilings and empty floors; this eliminates any bad reflections that would affect speech intelligibility, mainly in critical environments with high reverberation. VSA offers a precise directivity and control to give high intelligibility performance with wide frequency response, high-dynamics and coherence at distance. Thanks to the reliable and powerful amplifiers, the accurate speaker design, and the high efficiency of the digital technology, VSA II is able to achieve an extended and stable coverage, preserving at the same time a smooth uniform horizontal coverage.

VSA 2050 II

VSA 1250 II

VSA 850 II

The unobtrusive and robust aluminium cabinet blends seamlessly in any architecturally sensitive environments. The standard colors are white RAL 9003 and black RAL 9005, and custom colours are available on request. The modular design approach offers a uniform heat dissipation for maximum consistency over time. The installation is particularly simple thanks to the drilling template on the wooden package and the light weight of the speaker. Optional swivel brackets are available on request if the column has to be oriented horizontally.

The state of the art transducer developed for the VSA II offers the highest possible intelligibility and wider frequency response, according to RCF philosophy. A 1,4 tesla flux density is the result of the massive neodymium magnet to get an incredible mid frequency dynamic range. The neodymium magnet is very lightweight and helps to compact the size of the overall system.

RDNet
NETWORKED MANAGEMENT

The RCF RDNet is the perfect tool to help you to configure your VSA II system setup in any venues. The software helps to monitor and control all individual speakers with its own DSP setting and to secure the best performance of the system configuration.

RDNet is a secure and robust management for small, medium, and arena-sized sound systems as well as complex and extended installations. Based on a proprietary network protocol RDNet provides straightforward monitoring and intuitive control of the RCF audio system down to every connected device/object.

VSA SMART RC

The VSA-RC is an easy way to control the VSA speakers through the **VSA Remote App available on iOS or Android**. The following data are configurable on each VSA through the VSA-RC remote control:

- Select the proper beaming and tilting configuration
- Delay in metres
- Voice/music optimization filters
- Polarity
- Mute
- Volume
- Stand-By

- 50 W Class-D power amplifier for each transducer (VSA 2050 II: 20 | VSA 1250 II: 12 | VSA 850 II: 8)
- 48 kHz 32 bit processing
- Vertical Dispersion controlled up to 10° till 300 Hz
- Power Supply 115/230Vac; 24Vdc
- Extruded aluminium body
- Ceramic block terminals and thermal fuse on 0dB balanced priority input
- Standard installation accessories included
- Easy and fast configuration
- Indicators and control for EN 60849 monitoring facility
- Custom colors available

2050 COLUMN

VSA 2050 II

DIGITALLY STEERABLE COLUMN SPEAKER

The VSA 2050 II is a multi-amplified vertical steerable array that represents one of the latest RCF applications in terms of digital audio technology. Thanks to powerful DSPs it processes the audio signal sent to each speaker for controlling its vertical acoustic dispersion to address the audio signal exactly to the listening area, avoiding to send the acoustic energy to ceilings and empty floors, thus not introducing bad reflections that would affect speech intelligibility, mainly in critical environments with high reverberation time. Full RDNet compatibility.

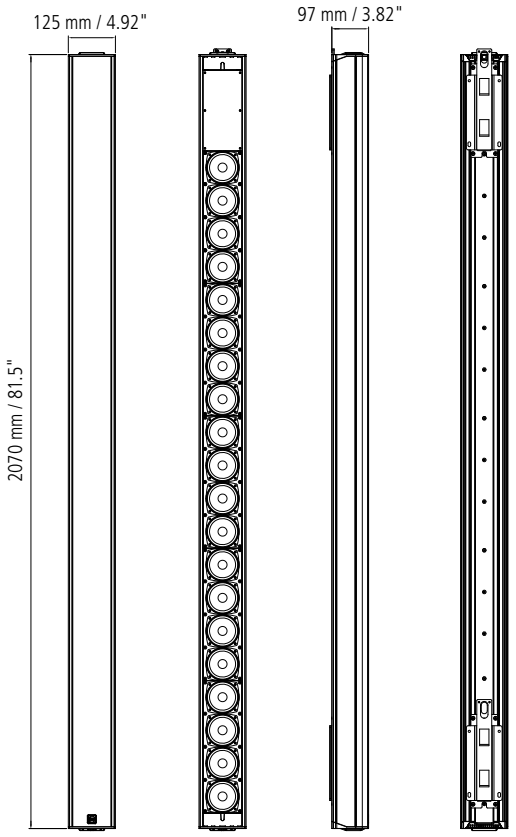

- 20 x Class D, 50 W amplifiers
- 96 dB Max SPL (@ 30 m)
- 20 x 3.5″ neo full range speakers
- 48 kHz 32 bit processing
- Horizontal dispersion 130°
- Vertical Coverage Beam from 10° to 30°
- Vertical Steering from 0° to –40°
- Standard installation accessories included
- Extruded aluminium body

PRODUCT NAME		PART NUMBER
VSA 2050 II	[220-240V] White	**p.n. 13100022**
VSA 2050 II B	[220-240V] Black	**p.n. 13100053**
VSA 2050 II	[220-240V] Custom Color	**p.n. 13100024**
VSA 2050 II	[115V] White	**p.n. 13100023**
VSA 2050 II B	[115V] Black	**p.n. 13100054**
VSA 2050 II	[115V] Custom Color	**p.n. 13100031**

ACOUSTICAL SPECIFICATIONS

Freq. Range (-10 dB):	100 Hz ÷ 18 kHz
Horiz. Coverage angle (-6 dB):	130°
Vertical coverage angle (-6 dB):	30°
Rated maximum SPL:	96 dB, @ 1m
Total power:	1300 W Peak, 650 W RMS

TRANSDUCERS

Fullrange:	20 x 3.5" neo, 1.0" v.c.

TECHNICAL

Processing	32 bit floating point DSP | 24 bit AD converters, 48 kHz
Functionalities	PEQs Channels | Compression | Beam-forming Speaker limiter and protection
Input sensitivity	0 dBu

TECHNICAL

Input connectors	Balanced screw terminal | Ceramic block
Input control	Remote control dedicated IR input Priority input command | Status remote monitoring Stand by remote command
Leds	Active | Communication | Status | Emergency

PHYSICAL SPECIFICATIONS

Enclosure:	Aluminium
Color:	Black RAL 9005 | White RAL 9003
Grille:	Steel
Cooling:	Convection
Protections:	Thermal, short circuit
Input connectors:	Ceramic screw terminals
Dimensions (HxWxD):	81.5″ x 4.9″ x 3.8″ | 2070 x 125 x 97 mm
Weight:	41.8 lbs - 19 kg

ACCESSORIES

Specifications pag. 43

IT 4000		p.n. 13360341
SWM-BR VSA II	White	p.n. 13360410
SWM-BR VSA II	Black	p.n. 13360442
TA1000 VSA		p.n. 13360318
VSA SMART RC		p.n. 13360330

1250 COLUMN

VSA 1250 II

DIGITALLY STEERABLE COLUMN SPEAKER

The VSA 1250 II is a multi-amplified vertical steerable array that represents one of the latest RCF applications in terms of digital audio technology. Thanks to powerful DSPs it processes the audio signal sent to each speaker for controlling its vertical acoustic dispersion to address the audio signal exactly to the listening area, avoiding to send the acoustic energy to ceilings and empty floors, thus not introducing bad reflections that would affect speech intelligibility, mainly in critical environments with high reverberation time. Full RDNet compatibility.

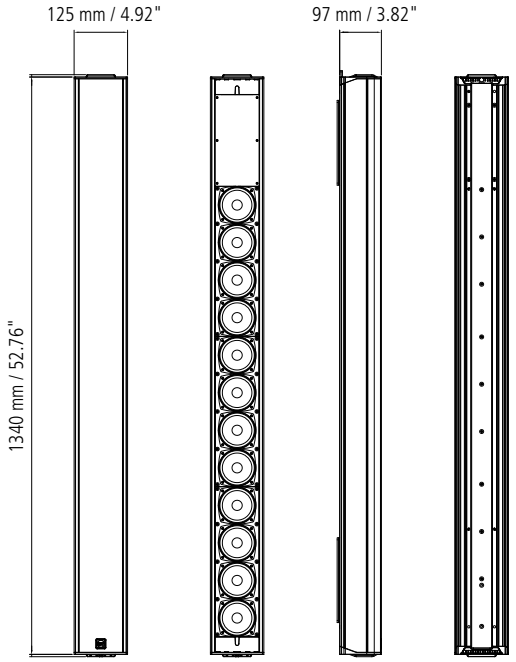

- 12 x Class D, 50 W amplifiers
- 94 dB Max SPL (@ 30 m)
- 12 x 3.5″ neo full range speakers
- 48 kHz 32 bit signal processing
- Horizontal dispersion 130°
- Vertical Coverage Beam from 10° to 30°
- Vertical Steering from 0° to –40°
- Standard installation accessories included
- Extruded aluminium body

PRODUCT NAME		PART NUMBER
VSA 1250 II	[220-240V] White	**p.n. 13100025**
VSA 1250 II B	[220-240V] Black	**p.n. 13100055**
VSA 1250 II	[220-240V] Custom Color	**p.n. 13100027**
VSA 1250 II	[115V] White	**p.n. 13100026**
VSA 1250 II B	[115V] Black	**p.n. 13100056**
VSA 1250 II	[115V] Custom Color	**p.n. 13100032**

ACOUSTICAL SPECIFICATIONS

Freq. Range (-10 dB):	100 Hz ÷ 18 kHz
Horiz. Coverage angle (-6 dB):	130°
Vertical coverage angle (-6 dB):	30°
Rated maximum SPL:	94 dB, @ 1m
Total power:	1300 W Peak, 650 W RMS

TRANSDUCERS

Fullrange:	12 x 3.5" neo, 1.0" v.c.

TECHNICAL

Processing	32 bit floating point DSP | 24 bit AD converters, 48 kHz
Functionalities	PEQs Channels | Compression | Beam-forming Speaker limiter and protection
Input sensitivity	0 dBu

TECHNICAL

Input connectors	Balanced screw terminal | Ceramic block
Input control	Remote control dedicated IR input Priority input command | Status remote monitoring Stand by remote command
Leds	Active | Communication | Status | Emergency

PHYSICAL SPECIFICATIONS

Enclosure:	Aluminium
Color:	Black RAL 9005 | White RAL 9003
Grille:	Steel
Cooling:	Convection
Protections:	Thermal, short circuit
Input connectors:	Ceramic screw terminals
Dimensions (HxWxD):	52,7″ x 4.9″ x 3.8″ | 1340 x 125 x 97 mm
Weight:	13.8 kg / 30.42 lbs

ACCESSORIES

Specifications pag. 43

IT 4000		p.n. 13360341
SWM-BR VSA II	White	p.n. 13360410
SWM-BR VSA II	Black	p.n. 13360442
TA1000 VSA		p.n. 13360318
VSA SMART RC		p.n. 13360330

850 COLUMN

VSA 850 II

DIGITALLY STEERABLE COLUMN SPEAKER

The VSA 850 II is a multi-amplified vertical steerable array that represents one of the latest RCF applications in terms of digital audio technology. Thanks to powerful DSPs it processes the audio signal sent to each speaker for controlling its vertical acoustic dispersion to address the audio signal exactly to the listening area, avoiding to send the acoustic energy to ceilings and empty floors, thus not introducing bad reflections that would affect speech intelligibility, mainly in critical environments with high reverberation time. Full RDNet compatibility.

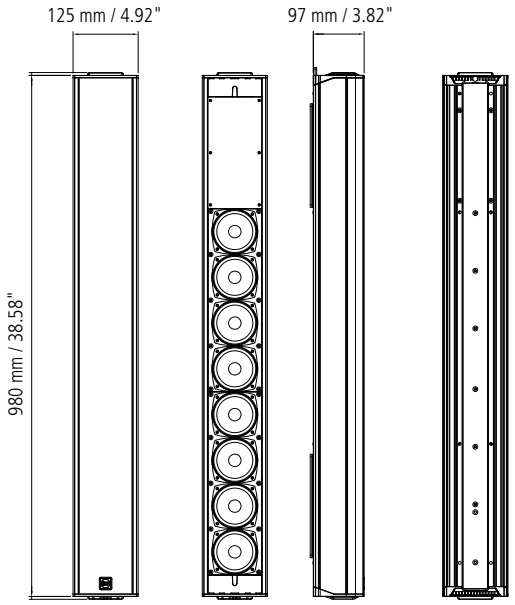

- 8 x Class D, 50 W amplifiers
- 93 dB Max SPL (@ 30 m)
- 8 x 3.5″ neo full range speakers
- 48 kHz 32 bit signal processing
- Horizontal dispersion 130°
- Vertical Coverage Beam from 10° to 30°
- Vertical Steering from 0° to –40°
- Standard installation accessories included
- Extruded aluminium body

PRODUCT NAME		PART NUMBER
VSA 850 II	[220-240V] White	**p.n. 13100028**
VSA 850 II B	[220-240V] Black	**p.n. 13100057**
VSA 850 II	[220-240V] Custom Color	**p.n. 13100030**
VSA 850 II	[115V] White	**p.n. 13100029**
VSA 850 II B	[115V] Black	**p.n. 13100058**
VSA 850 II	[115V] Custom Color	**p.n. 13100033**

ACOUSTICAL SPECIFICATIONS

Freq. Range (-10 dB):	130 Hz ÷ 18 kHz
Horiz. Coverage angle (-6 dB):	130°
Vertical coverage angle (-6 dB):	30°
Rated maximum SPL:	93 dB, @ 1m
Total power:	1300 W Peak, 650 W RMS

TRANSDUCERS

Fullrange:	8 x 3.5'' neo, 1.0'' v.c.

TECHNICAL

Processing	32 bit floating point DSP | 24 bit AD converters, 48 kHz
Functionalities	PEQs Channels | Compression | Beam-forming Speaker limiter and protection
Input sensitivity	0 dBu

TECHNICAL

Input connectors	Balanced screw terminal | Ceramic block
Input control	Remote control dedicated IR input Priority input command | Status remote monitoring Stand by remote command
Leds	Active | Communication | Status | Emergency

PHYSICAL SPECIFICATIONS

Enclosure:	Aluminium
Color:	Black RAL 9005 | White RAL 9003
Grille:	Steel
Cooling:	Convection
Protections:	Thermal, short circuit
Input connectors:	Ceramic screw terminals
Dimensions (HxWxD):	38.58″ x 4.92″ x 3.82″ | 980 x 125 x 97 mm
Weight:	13.2 kg / 29.1 lbs

ACCESSORIES

Specifications pag. 43

IT 4000		p.n. 13360341
SWM-BR VSA II	White	p.n. 13360410
SWM-BR VSA II	Black	p.n. 13360442
TA1000 VSA		p.n. 13360318
VSA SMART RC		p.n. 13360330

VSA ACCESSORIES

VSA SMART RC

cod. 13360330

SMARTPHONE REMOTE CONTROL FOR VSA COLUMN SPEAKERS

The VSA-RC is an easy way to control the VSA speakers through the VSA Remote App available on iOS or Android. The I/R receiving diode is recessed, and its directivity coverage has been narrowed to receive I/R commands just from the dedicated remote located in front of the column axis. Thanks to this, if two columns are one close to the other, there is no risk to drive two receivers at the same time.

- Select the proper beaming and tilting configuration
- Delay in metres
- Voice/music optimization filters
- Selection of equalization
- Phase rotation
- Input selection
- Delay setting

SWM-BR VSA II BLACK

cod. 13360442 **BLACK**

SWM-BR VSA II

cod. 13360410 **WHITE**

PAIR OF SWIVEL BRACKETS FOR VSA COLUMN SPEAKERS

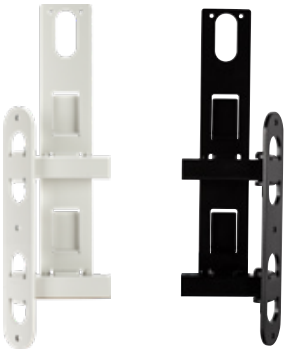

- Two mounting points for the VSA loudspeaker rear side.
- Three holes for wall mounting through M5 wall plugs.
- Two bolts and nuts (used as pins) can be tightened to fix the VSA loudspeaker when the horizontal angle pointing is correct.
- Color: White RAL 9003 and Black RAL 9005
- Two holes to secure the VSA loudspeaker to the swivel bracket through two screws (M5x10)

TA1000 VSA

cod. 13360318

100V TRANSFORMER FOR VSA ACTIVE SPEAKERS

TA 1000 is an accessory that consists of a small printed circuit board with a transformer that allows the connection of a 100 V line (amplifier output) directly to the aux audio input (0 dBu) of an active speaker.

IT 4000

cod. 13360341

INPUT TRANSFORMER 100V TO 0 DB FOR VSA ACTIVE SPEAKERS

IT 4000 is an accessory that consists of a transformer that allows the connection of a 100V (or 70V) passive speakers line directly to the audio input (0 dBu) of an active speaker.

L24 COLUMN

L 2406T

THREE-WAY SPEAKER COLUMN ARRAY

The L2406T is a full range high intelligibility compact 3 way column speaker array with vertical controlled directivity for medium to large size installations. It is equipped with six 5" woofers and four 1" dome tweeters mounted in front of the two central woofers. This particular design permits coherent sound dispersion minimizing lobing in a very compact enclosure. The two central woofers are controlled differently from the other four because of the tweeters in front of them, in order to improve the directivity providing a true cardioid column operation.The wide coverage horizontal angle and the controlled vertical dispersion allow correct sound reproduction serving a wide area and assistance in limiting feedback and reverberated sound. A speech filter can be activated for enhancing the voice frequencies and improving speech intelligibility. The crossover is designed to avoid secondary lobing creation. Mounting accessories are provided and are designed to keep the column as close as possible to the wall and simplify the installation allowing suitable tilting. The L2406T can be used connected to a low impedance amplifier to handle 200 W RMS power. It also includes a 60 W line transformer for 100 V systems. The crossover is equipped with a circuit to protect the four 1" dome tweeters.

- 200 W RMS power handling
- 126 dB max SPL
- 100 ÷ 20000 Hz frequency range
- 150° x 30° constant directivity coverage angle
- 6 x 5″ woofers
- 4 x 1″ dome tweeters
- Baltic birch plywood cabinet
- Speech enhancer filter

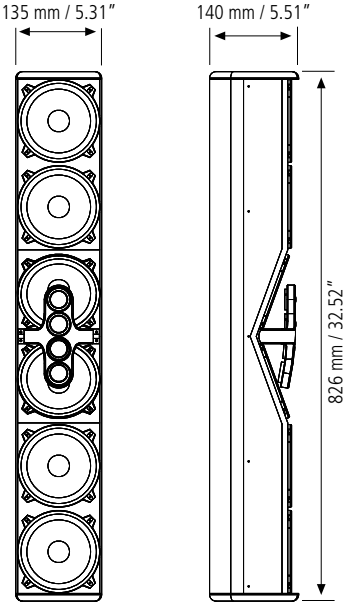

PRODUCT NAME		PART NUMBER
L 2406T	Black	**p.n. 13000169**
L 2406T W	White	**p.n. 13000177**

ACOUSTICAL SPECIFICATIONS

Freq. Range (-10 dB):	100 Hz ÷ 20 kHz
Horiz. Coverage angle (-6 dB):	150°
Vertical coverage angle (-6 dB):	30°
System sensitivity:	97 dB, 1W @ 1m
Rated maximum SPL:	126 dB, @ 1m
System input power rating RMS:	200 W
System input power rating peak:	800 W
Recommended amplifier:	400 W
Power selection (100 V):	60 - 30 - 15 - 10 W

TRANSDUCERS

Low frequency:	6 x 5″ (130 mm) woofer, 1″ (25 mm) v.c.
Nominal impedance:	8 ohm
Input power rating:	30 W AES; 60 W Peak
Sensitivity:	90 dB, 1W @ 1m
High frequency:	4 X 1″(25 mm) throat, 1″(25 mm) v.c.
Nominal impedance:	8 ohm
Input power rating:	10 W AES, 20 W PEAK
Sensitivity:	90 dB, 1W @ 1m

PHYSICAL SPECIFICATIONS

Enclosure:	Baltic birch plywood
Hardware:	10 W AES, 20 W
Color:	Black and White
Grille:	Steel
Dimensions (HxWxD):	32.52″x 5.31″x 5.51″ | 826 x 135 x 140 mm
Weight:	12.8 kg / 28.22 lbs

100 COLUMN

MQ 100L

THREE-WAY COLUMN LOUDSPEAKER

MQ 100L (available in black and white) is a 3 way column loudspeaker providing natural hi-fi delity sound of both speech and music, suitable for sound system having fixed loudspeakers where the environment is acoustically critical or with architectural constraints. The wide horizontal coverage angle (180°) and the vertical dispersion (60°) allow the correct sound reproduction in a wide space, in order to limit feedback and improve the sound directivity which is important, for instance, in halls having a long reverberation time. The mounting accessories are included. These have been engineered to keep the column as close as possible to the wall and simplify the installation. The 60° vertical dispersion is asymmetric: it is the difference between 20° upwards and 40° downwards. The vertical dispersion axis is in fact already angled 10° downwards, making it unnecessary to tilt the sound column excessively..

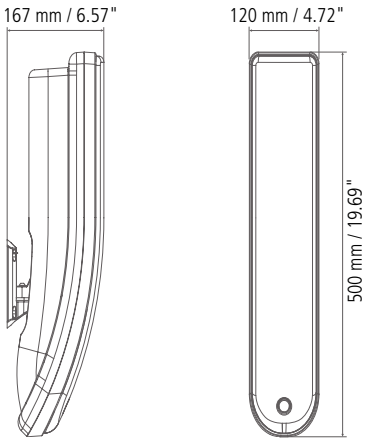

- 2 rubber surround 3.5″ woofers
- 2 fabric surround 3.5″ mid-woofers
- 2 cloth coated 0.75″ dome tweeters
- 118 dB (80 W/1 m) max. SPL
- Incl. 100V transformer multitap
- Power rotary switch
- Direct connection to Low-Z speaker lines
- Easy to install

Its tilt angle can be chosen among 0° – 5° – 10°.

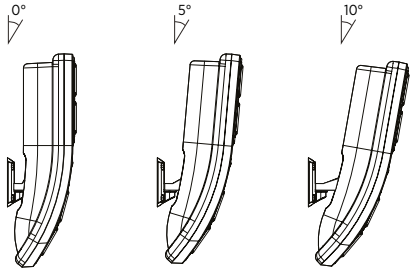

PRODUCT NAME		PART NUMBER
MQ 100L B	Black	**p.n. 13000186**
MQ 100L W	White	**p.n. 13000187**

ACOUSTICAL SPECIFICATIONS

Freq. Range (-10 dB):	130 Hz ÷ 20 kHz
Horiz. Coverage angle (-6 dB):	180°
Vertical coverage angle (-6 dB):	60°
System sensitivity:	93 dB, 1W @ 1m
Rated maximum SPL:	112 dB, @ 1m
System input power rating RMS:	80 W
System input power rating peak:	320 W
Recommended amplifier:	60 W
Power selection (100 V):	40 - 20 - 10 - 5 W

TRANSDUCERS

Low frequency:	2 x rubber surround 3.5″ (89 mm) woofer
Midrange frequency:	2 x rubber surround 3.5″ (89 mm) woofer
High frequency:	2 cloth coated 0.75″ (25 mm) dome tweeter

PHYSICAL SPECIFICATIONS

Enclosure:	Plastic
Hardware:	Wall mount bracket
Color:	White - RAL 9016, Black - RAL 9005
Grille:	Steel
Dimensions (HxWxD):	19.69″x4.72″x6.57″ | 500x120x167 mm
Weight:	2.73 kg / 6.02 lbs

DP5 PROJECTOR

DP 5EN

UNIDIRECTIONAL SOUND PROJECTOR

DP 5EN is a weatherproof sound projector suitable for all those installations where high intelligibility for alarm messages broadcasting and great sound reproduction quality are required. Thanks to its IP65 protection grade, it can be installed both indoor and outdoor. Moreover, a modern and endearing design makes it the perfect product for environments where projectors are intended also as architectural elements and contribute to improve global aesthetics.

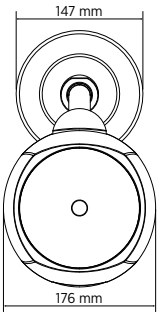

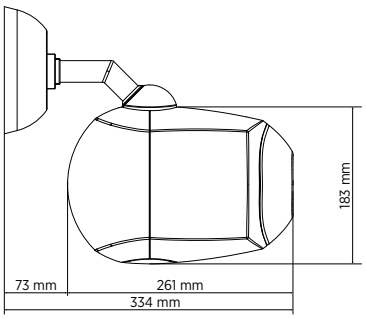

- 5" fullrange transducer
- Power selectable (100 V): 20 – 10 – 5 – 2.5 W
- 88 dB sensitivity
- Colour white RAL 9016
- Flameproof ABS body, steel grille
- In/out ceramic terminal block
- Thermal fuse protection
- Protection grade IP65

PRODUCT NAME	PART NUMBER
DP 5EN	**p.n. 13133076**

CERTIFICATION

EN 54-24	**CPR: 0068-CPR-058/2014**	CE

ACOUSTICAL SPECIFICATIONS

Frequency Response (-10dB):	80 Hz ÷ 20000 Hz
Coverage angle:	210°
Max SPL @ 1m:	101 dB
Max SPL @ 4m:	89 dB
System Sensitivity:	88 dB
System Sensitivity 1W @ 4m:	76 dB
Power Handling:	20 W RMS
Peak Power Handling:	80 W PEAK
Recommended Amplifier:	40 W
Protections:	Thermal fuse

ACOUSTICAL SPECIFICATIONS

Power selection (100 V):	20 - 10 - 5 - 2.5 W

TRANSDUCERS

Fullrange:	5.0"

PHYSICAL SPECIFICATIONS

Enclosure:	ABS
Input/Output connectors:	Ceramic screw terminals
IP protection grade:	IP 65
Hardware:	Wall mount metal plate
Color:	White - RAL 9016
Grille:	Steel
Height:	183 mm / 7.2 inches
Width:	176 mm / 6.93 inches
Depth:	261 mm / 10.28 inches
Weight:	2.61 kg / 5.75 lbs

BS5 PENDANT

BS 5EN

PENDANT SEPAKER

BS 5EN is a pendant speaker suitable for all those installations where high intelligibility for alarm messages broadcasting and great sound reproduction quality are required. Thanks to its IP65 protection grade, it can be installed both indoor and outdoor. Moreover, a modern and endearing design makes it the perfect product for environments where projectors are intended also as architectural elements and contribute to improve global aesthetics.

- 5" coaxial woofer with 0.75" dome tweeter
- Power selectable (100 V): 20 – 10 – 5 – 2.5 W
- 88 dB sensitivity
- Colour white RAL 9016
- Flameproof ABS body, steel grille
- In/out ceramic terminal block
- Thermal fuse protection
- Protection grade IP65

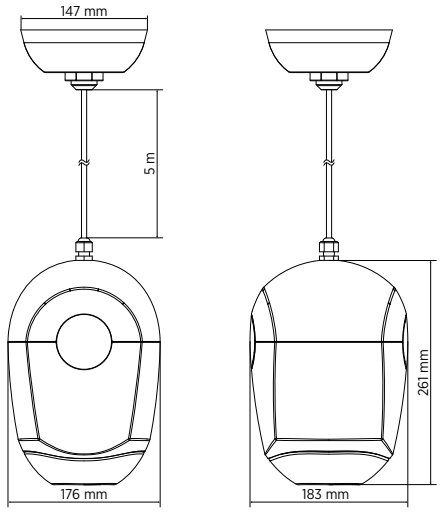

PRODUCT NAME	PART NUMBER
BS 5EN	**p.n. 13133078**

CERTIFICATION

EN 54-24	**CPR: 0068-CPR-058/2014**	CE

ACOUSTICAL SPECIFICATIONS

Frequency Response (-10dB):	80 Hz ÷ 20000 Hz
Coverage angle:	170°
Max SPL @ 1m:	101 dB
Max SPL @ 4m:	89 dB
System Sensitivity:	88 dB
System Sensitivity 1W @ 4m:	76 dB
Power Handling:	20 W RMS
Peak Power Handling:	80 W PEAK
Recommended Amplifier:	40 W
Protections:	Thermal fuse

ACOUSTICAL SPECIFICATIONS

Power selection (100 V):	20 - 10 - 5 - 2.5 W

TRANSDUCERS

Dome Tweeter:	0.75''
Woofer:	Coaxial 5.0''

PHYSICAL SPECIFICATIONS

Enclosure:	ABS
Input/Output connectors:	Ceramic screw terminals
IP protection grade:	IP 65
Hardware:	Wall mount metal plate - 5m cable
Color:	White - RAL 9016
Grille:	Steel
Height:	261 mm / 10.28 inches
Width:	176 mm / 6.93 inches
Depth:	183 mm / 7.2 inches
Weight:	2.79 kg / 6.15 lbs

S12 SUBWOOFER

S 12

BASS REFLEX SUBWOOFER

S 12 is a high-power, compact subwoofer system ideal for installations where the physically small size and impact of a 12" driver are desired. Extending the frequency response below 40Hz, this highly efficient design is capable of providing output levels normally associated with considerably larger enclosures. A system suited to music playback in applications ranging from clubs, bars and cafes, right through to theatres and corporate applications. The low-frequency transducer is a 12" woofer with a 2.5" voice coil. Its design is the result of the latest refinements in compact subwoofer production, resulting in a fast and controlled reproduction of the bass frequency range. It is particularly well-suited for high-quality multimedia applications.

- 400W AES power handling
- 125 dB max SPL
- 40 ÷ 200 Hz frequency range
- 1 x 12" high-power woofer
- High-quality plywood cabinet
- Steel front grille with clothing
- M20 standard pole mount in the top section of the cabinet
- 4 pole EUROBLOCK connector (audio input and parallel link output)

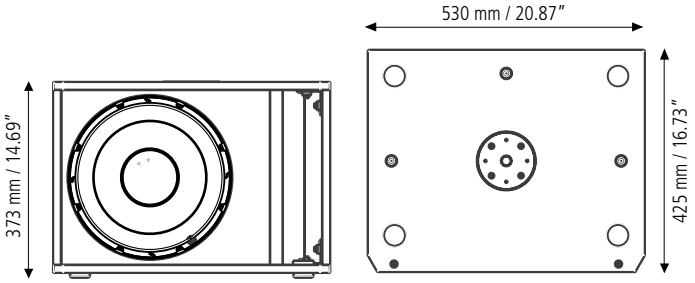

PNL IN-OUT SPEAKON is an optional panel that allows to switch from EUROBLOCK to SpeakON input / output connectors. This can be done easily thanks to the single connector on the back

PRODUCT NAME	PART NUMBER
S 12	**p.n. 13000618**

ACOUSTICAL SPECIFICATIONS

Freq. Range (-10 dB):	40 Hz ÷ 200 Hz
System sensitivity:	93 dB, 1W @ 1m
Rated maximum SPL:	125 dB, @ 1m
System nominal impedance:	8 ohm
System input power rating RMS:	400 W
System input power rating PEAK:	1600 W
Recommended amplifier:	800 W

TRANSDUCERS

Low frequency:	12" (304 mm) woofer, 2.5" (63.5 mm) v. c.
Nominal impedance:	8 ohm

TRANSDUCERS

Input power rating:	400 W AES, 800 W PEAK
Sensitivity:	93 dB, 1W @ 1m

PHYSICAL SPECIFICATIONS

Enclosure:	Rectangle, 15 mm MDF
Rigging inserts:	1 x M20, 10 x M10
Color:	Black
Grille:	Steel with clothing
Input connectors:	Euroblock
Dimensions (HxWxD):	14.96"x17.72"x16.54" | 373x530x425 mm
Weight:	50.27 lbs | 22.8 kg

ACCESSORIES

PNL IN-OUT SPEAKON	p.n. 12399062

S10 SUBWOOFER

S 10

BASS REFLEX SUBWOOFER

S 10 is a high-power, compact subwoofer system ideal for installations where the physically small size and impact of a 10'' driver are desired. Extending the frequency response below 50Hz, this highly efficient design is capable of providing output levels normally associated with considerably larger enclosures. A system suited to music playback in applications ranging from clubs, bars and cafes, right through to theatres and corporate applications. The low-frequency transducer is a 10" woofer with a 2.5" voice coil. Its design is the result of the latest refinements in compact subwoofer production, resulting in a fast and controlled reproduction of the bass frequency range. It is particularly well-suited for high- quality multimedia applications.

- 400W AES power handling
- 124 dB max SPL
- 50 ÷ 200 Hz frequency range
- 1 x 10" high-power woofer
- High-quality plywood cabinet
- Steel front grille with clothing
- M20 standard pole mount in the top section of the cabinet
- 4 pole EUROBLOCK connector (audio input and parallel link output)

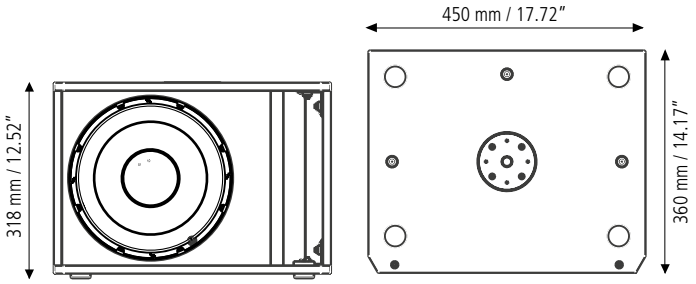

PNL IN-OUT SPEAKON is an optional panel that allows to switch from EUROBLOCK to SpeakON input / output connectors. This can be done easily thanks to the single connector on the back

PRODUCT NAME	PART NUMBER
S 10	**p.n. 13000617**

ACOUSTICAL SPECIFICATIONS

Freq. Range (-10 dB):	50 Hz ÷ 200 Hz
System sensitivity:	92 dB, 1W @ 1m
Rated maximum SPL:	124 dB, @ 1m
System nominal impedance:	8 ohm
System input power rating RMS:	400 W
System input power rating PEAK:	1600 W
Recommended amplifier:	800 W

TRANSDUCERS

Low frequency:	10" (254 mm) woofer, 2.5" (63.5 mm) v.c.
Nominal impedance:	8 ohm

TRANSDUCERS

Input power rating:	400 W AES, 800 W PEAK
Sensitivity:	92 dB, 1W @ 1m

PHYSICAL SPECIFICATIONS

Enclosure:	Rectangle, 15 mm MDF
Rigging inserts:	10 x M10
Color:	Black
Grille:	Steel with clothing
Input connectors:	Euroblock
Dimensions (HxWxD):	12.52"x17.72"x14.17" | 318x450x360 mm
Weight:	41.23 lbs | 18.7 kg

ACCESSORIES

PNL IN-OUT SPEAKON	p.n. 12399062

RDNet

ELECTRONICS

RDNET CONTROL 8

8 OUTPUT MASTER UNIT

p.n. 17170154

RDNet Control 8 is a USB/Ethernet interface with 8 RDNet inputs, able to connect up to 256 (8x32) RCF RDNet compatible devices via Ethernet CAT5 cables. With Control 8 and RDNet management software, it's possible to manage and control single or groups of devices with in-depth real-time monitoring. The RDNet Scan function sequentially scans all audio devices connected to Control 8, recognizes, assigns digital address labels, and adds them as objects in the main RDNet window for management, audio routing, monitoring, and adjustments.

- Ethernet (remote control) and USB (direct control) PC connection to RDNet
- Control up to 8 SUB-NETS of up to 32 slave devices
- All devices are cyclically scanned ("polling") 10 times a second
- Auto detect device placement
- Controlling slave devices status and functions
- Monitoring and displaying faults and warnings sent from slave devices
- Storing subnet user filters configuration in a removable memory card

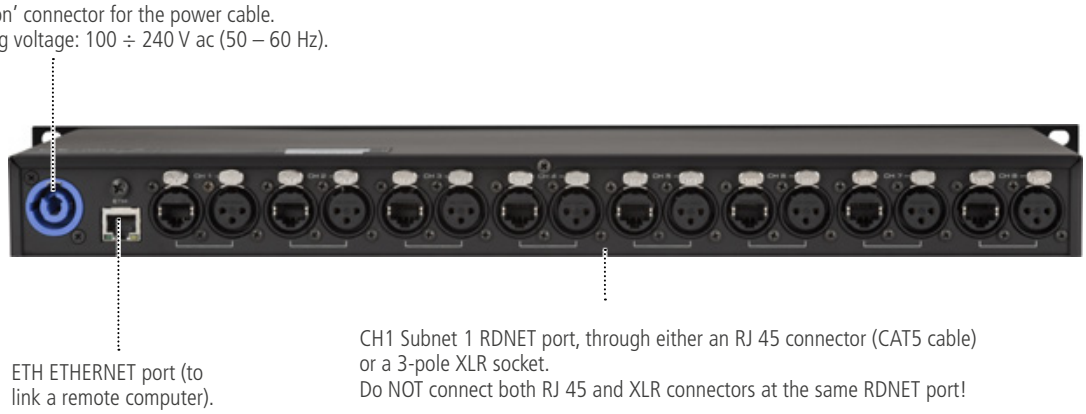

RDNET CONTROL 2

2 OUTPUT MASTER UNIT

RDNet Control 2 is a USB/Ethernet interface with 2 RDNet inputs, able to connect up to 64 (2x32) RCF RDNet compatible devices via Ethernet CAT5 cables. With Control 2 and RDNet management software, it's possible to manage and control single or groups of devices with in-depth real-time monitoring. The RDNet Scan function sequentially scans all audio devices connected to Control 2, recognizes, assigns digital address labels, and adds them as objects in the main RDNet window for management, audio routing, monitoring, and adjustments.

p.n. 17170163

- Real-time USB device monitoring and control
- Auto detect device placement
- Control up to 2 SUB-NETS of up to 32 slave devices
- All devices are cyclically scanned ("polling") 10 times a second
- Connected devices are automatically added to the software synoptic

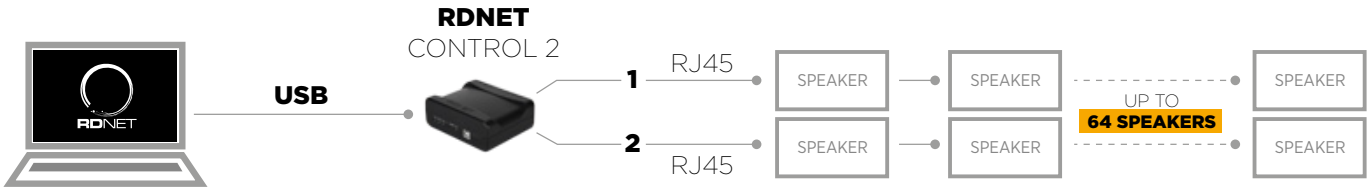

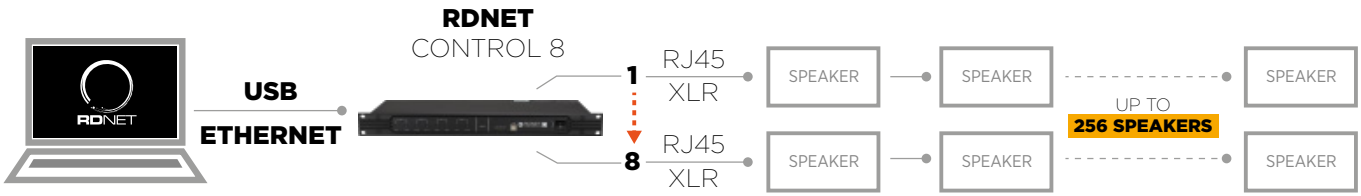

BUSINES

COMPLETE AUD

SS MUSIC
IO SOLUTIONS

www.rcf.it

HEADQUARTERS:

RCF S.p.A. Italy
tel. +39 0522 274 411
e-mail: info@rcf.it

RCF UK
Int. +44 (0) 1702 800846
e-mail: info@rcfaudio.co.uk

RCF France
tel. +33 6 24 15 81 76
e-mail: france@rcf.it

RCF Germany
tel. +49 2203 925370
e-mail: germany@rcf.it

RCF Spain
tel. +34 91 817 42 66
e-mail: info@rcfaudio.es

RCF Benelux
tel. +49 (0) 2203 9253724
e-mail: benelux@rcf.it

RCF USA Inc.
tel. +1 732-9026100
e-mail: info@rcf-usa.com

The data and designs are not binding; RCF reserves the right to modify the data and designs at any time and without previous notice.

10116273

EN 09/2021